SKILLING, HELLE, CHRISTIANSEN, ROBERTSON — Structural & Civil Engineers

PROJECT: THE WORLD TRADE CENTER | TITLE: GIRDER CONNECTION DETAILS | DATE: 11-3-72

REVISIONS

Released for construction 11-20-72

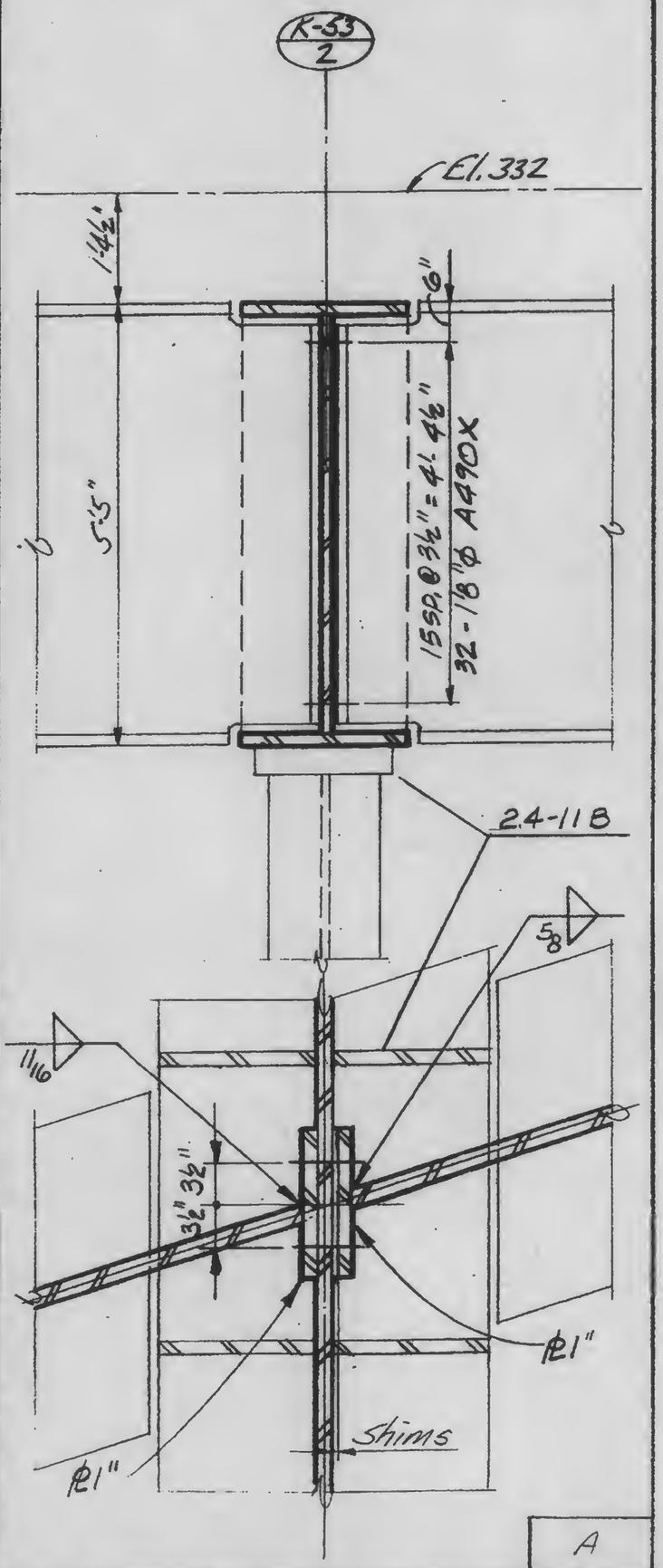

A

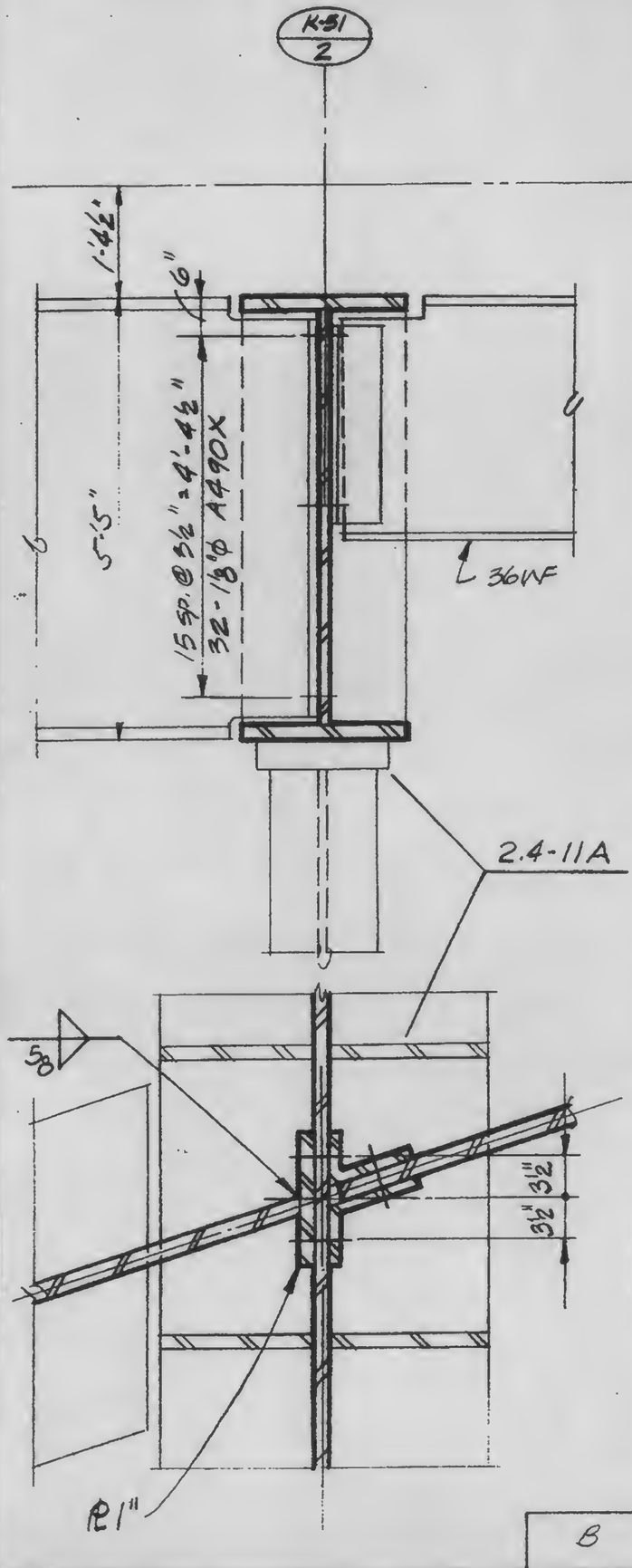

B

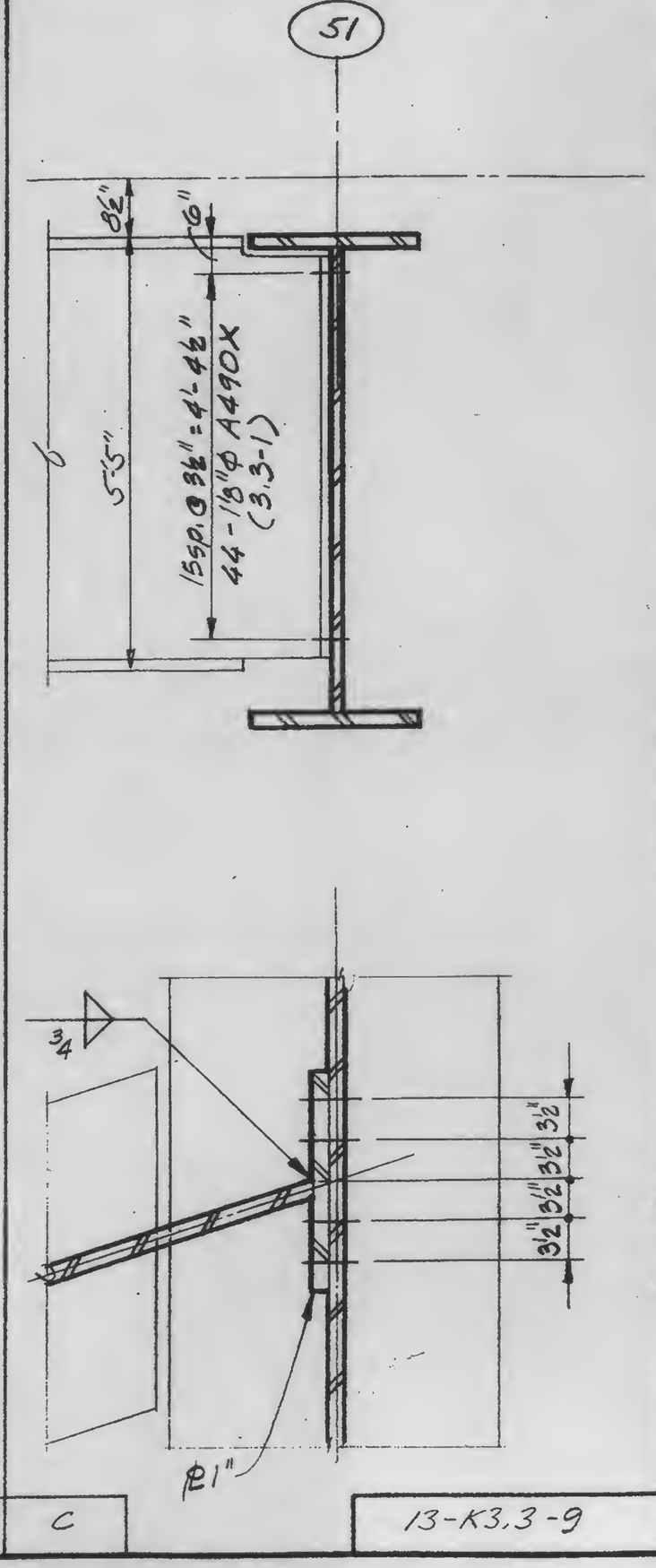

C

LICENSED PROFESSIONAL ENGINEER
LESLIE E ROBERTSON
No. 34360
UNIVERSITY OF THE STATE OF NEW YORK

DESIGNED

DRAWN

REVIEWED

13-K3.3-9