SKILLING, HELLE, CHRISTIANSEN, ROBERTSON — Structural & [illegible] Engineers

PROJECT: THE WORLD TRADE CENTER | TITLE: GIRDER DETAILS AT FUTURE COLUMNS | DATE: 11-[illegible]-72

REVISIONS

RELEASED FOR CONSTRUCTION 11-24-72

12-11-72

2-5-73

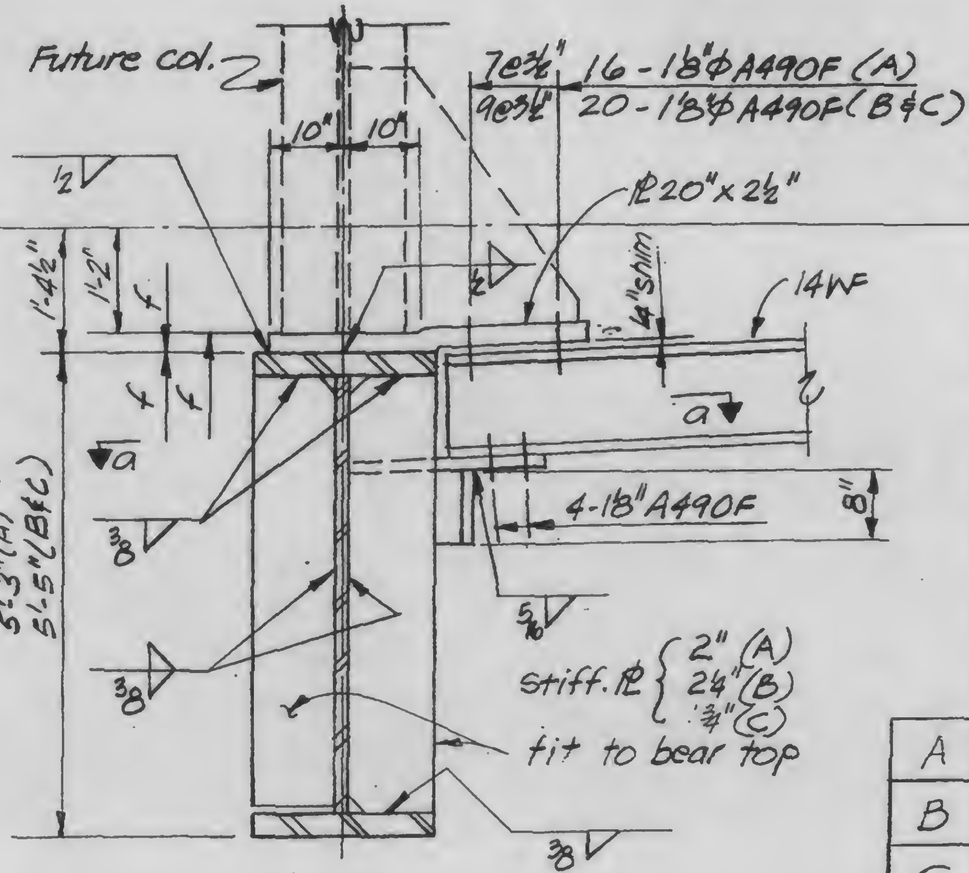

A
B
C

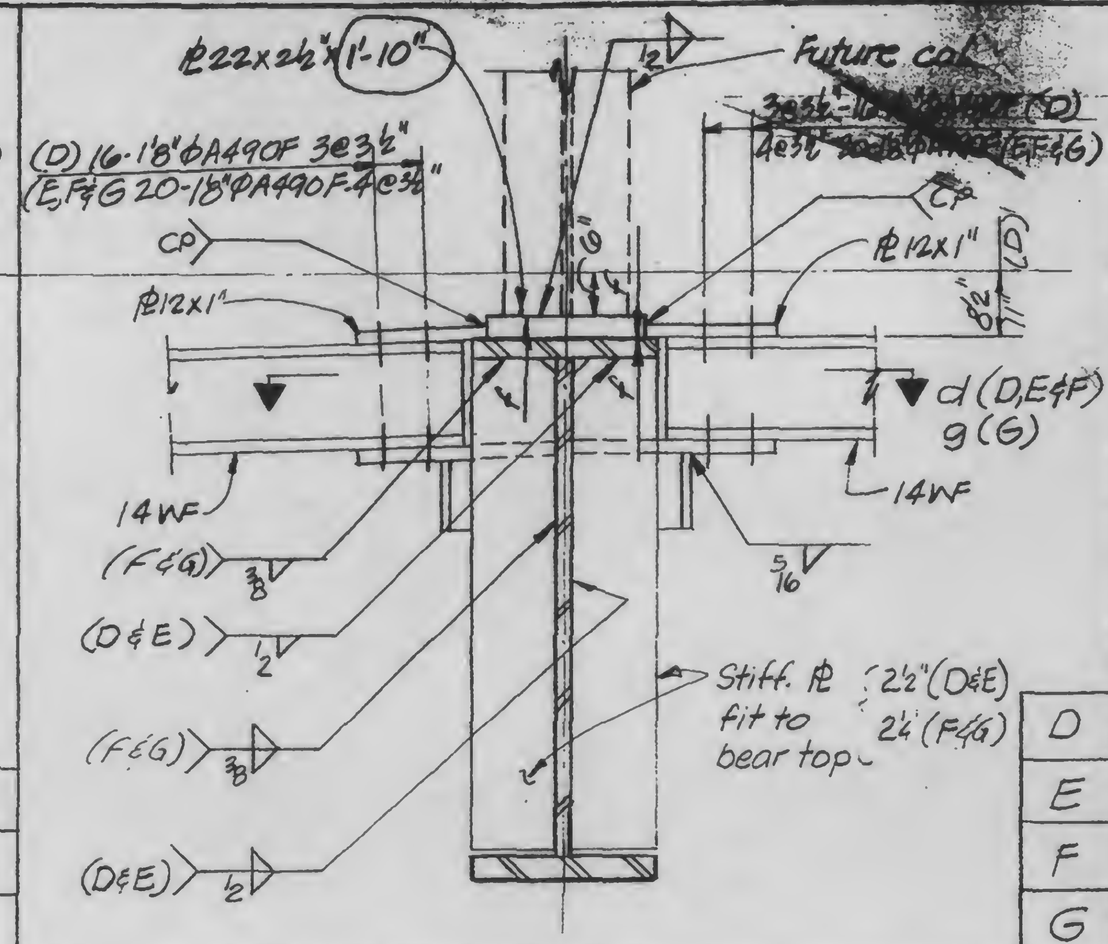

D
E
F
G

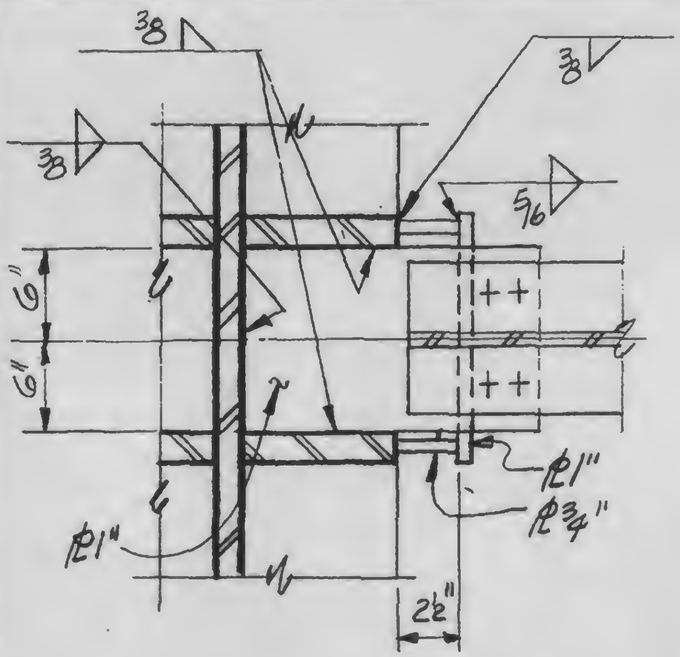

a

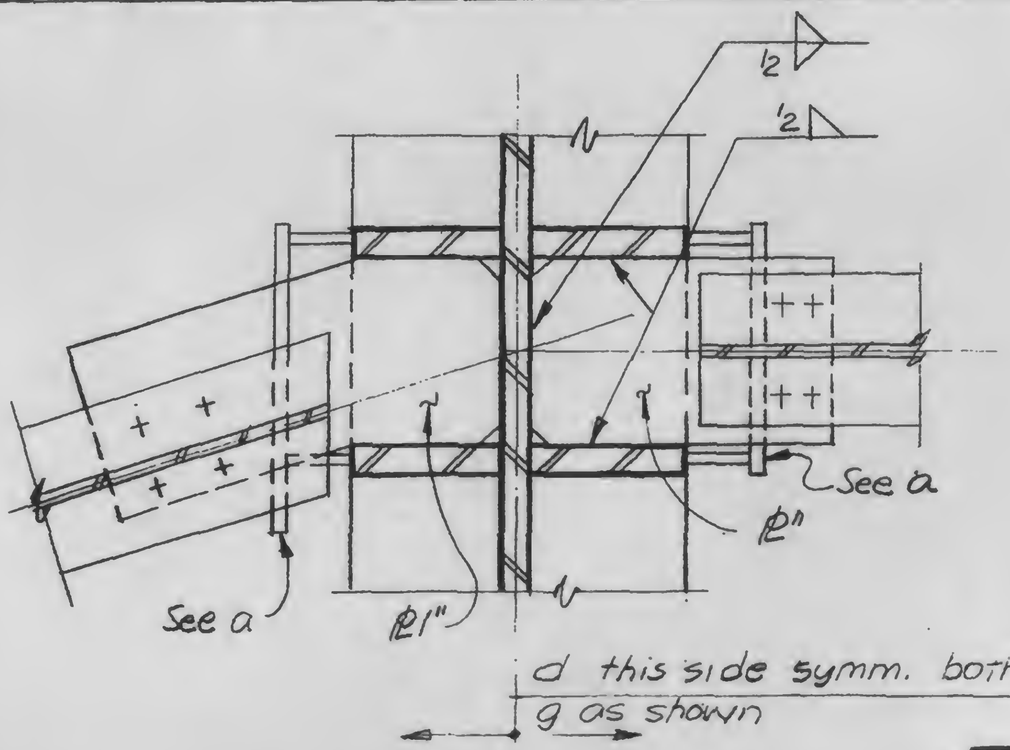

d this side symm. both sides
g as shown

d
g

13-K3.4-5.1

LICENSED PROFESSIONAL ENGINEER — LESLIE E. ROBERTSON — No. 34360 — UNIVERSITY OF THE STATE OF NEW YORK

DESIGNED

DRAWN

REVIEWED