SKILLING, HELLE, CHRISTIANSEN, ROBERTSON — Structural & Civil Engineers

PROJECT: THE WORLD TRADE CENTER

TITLE: GIRDER DETAILS AT FUTURE COLS.

DATE: 11-3-72

REVISIONS

RELEASED FOR CONSTRUCTION 11-24-72

6-20-73R

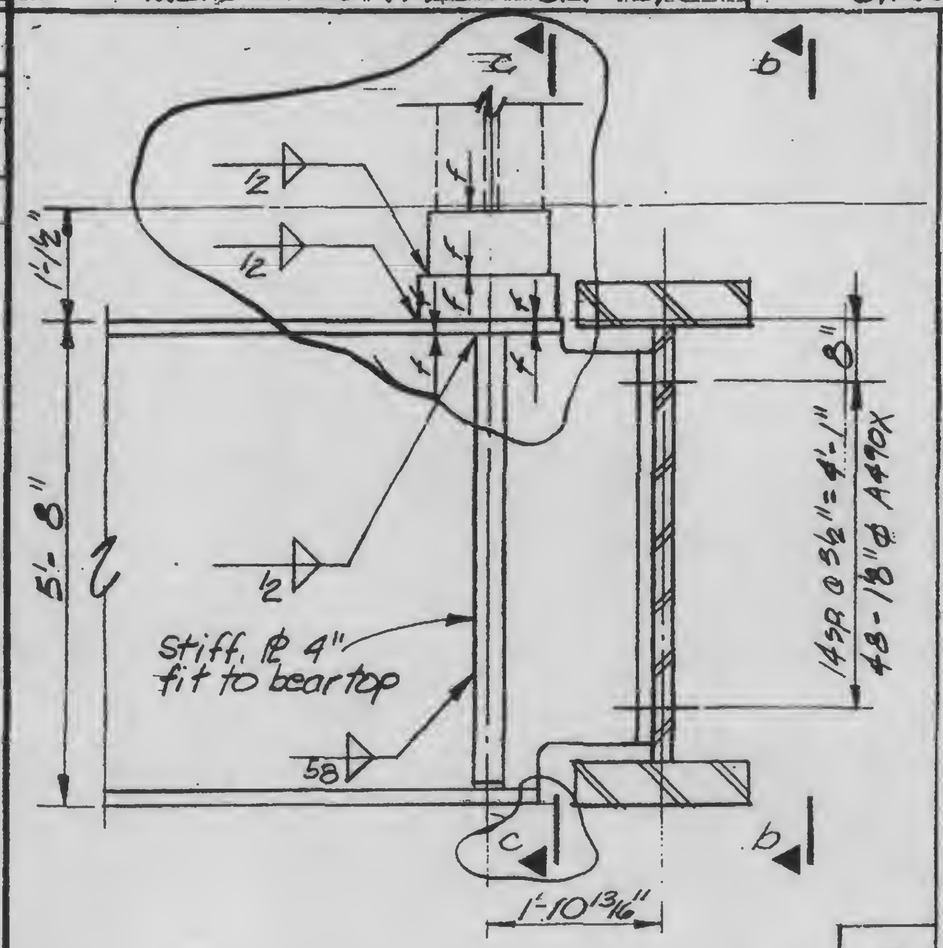

a

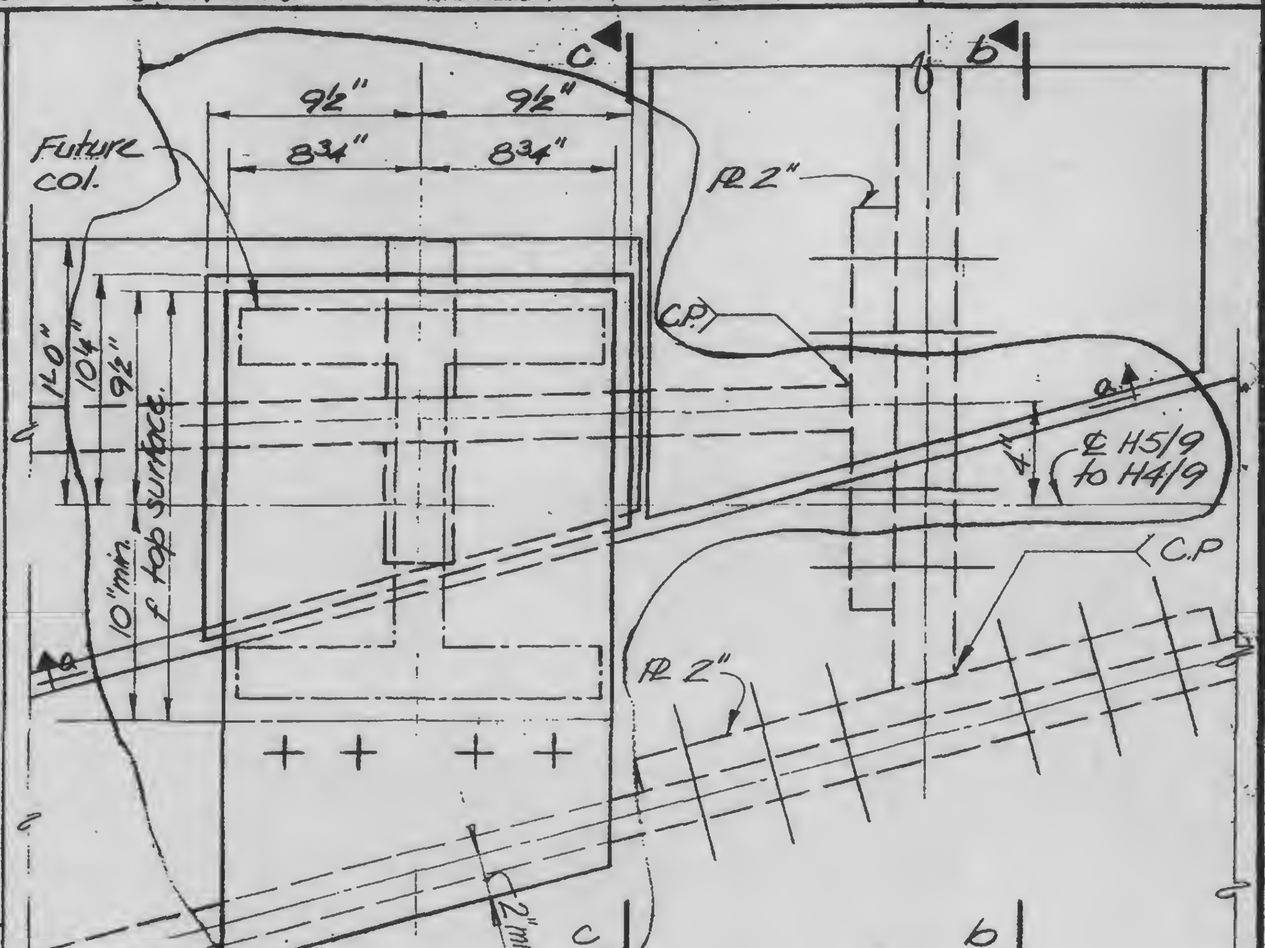

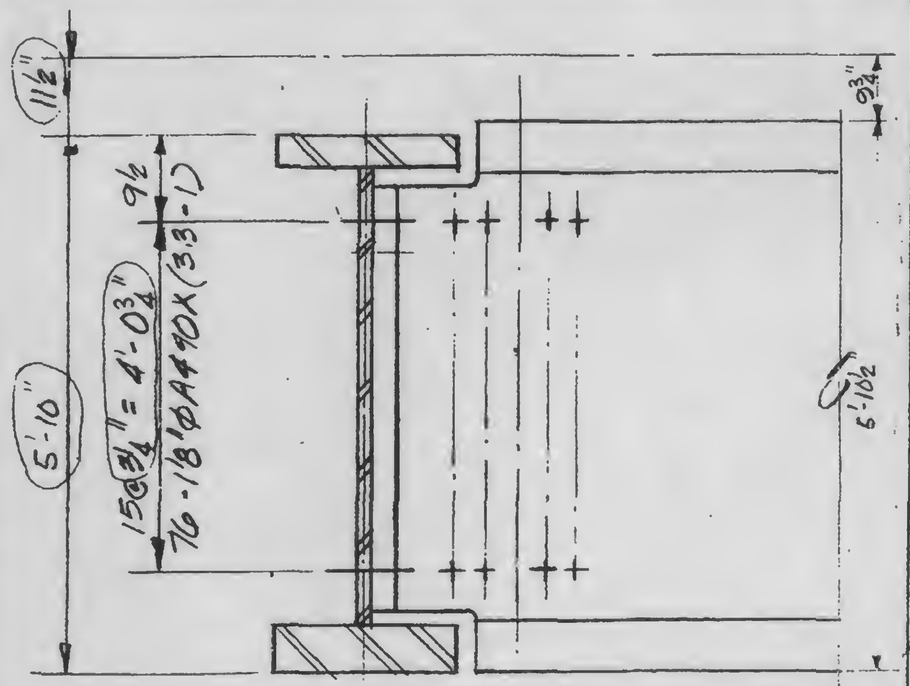

b c

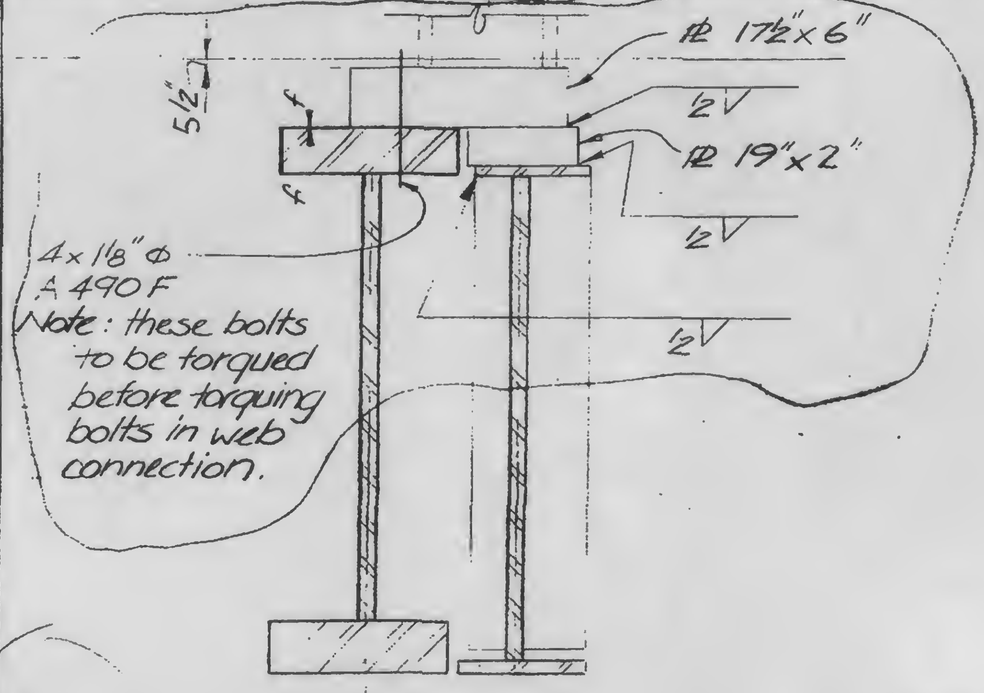

LICENSED PROFESSIONAL ENGINEER — LESLIE E. ROBERTSON — No. 34360 — UNIVERSITY OF THE STATE OF NEW YORK

DESIGNED K.C.

DRAWN P.M.O

REVIEWED W.A.B.

13-K3.4-8