SKILLING, HELLE, CHRISTIANSEN, ROBERTSON — Structural & Civil Engineers

PROJECT: THE WORLD TRADE CENTER | TITLE: GIRDER DETAILS AT FUTURE COLS. | DATE: 11-3-72

REVISIONS

RELEASED FOR CONSTRUCTION 11-24-72

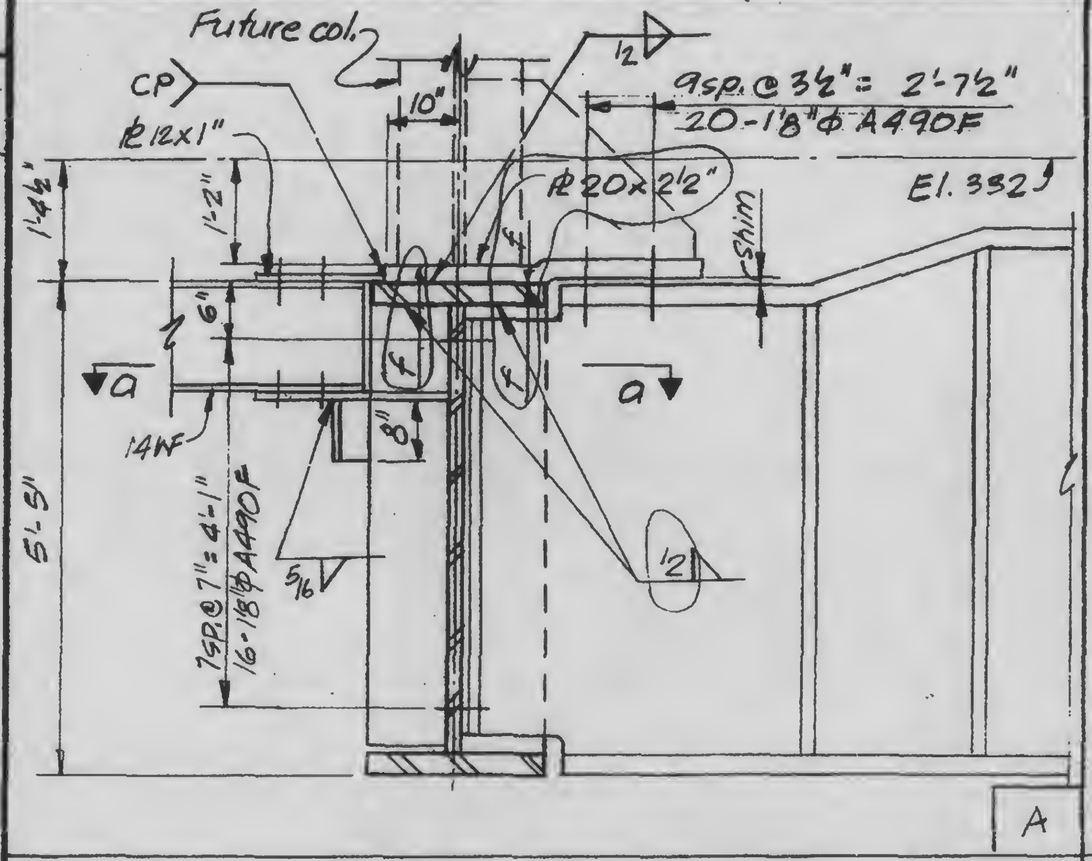

A

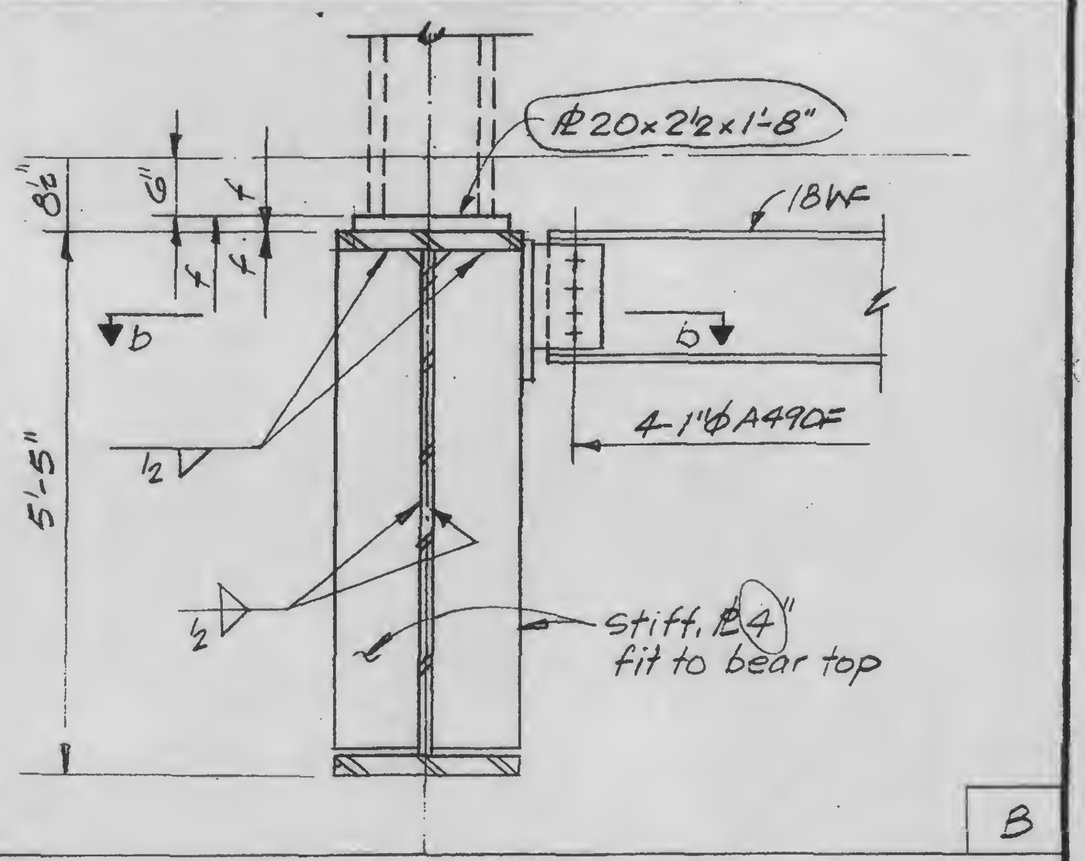

B

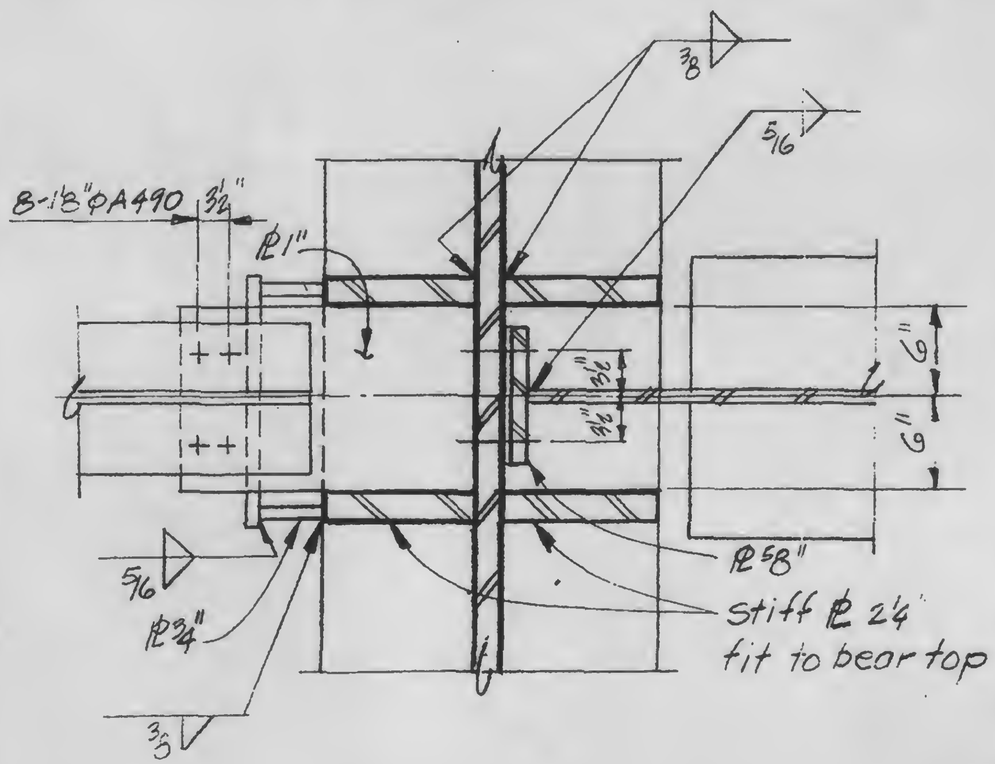

a

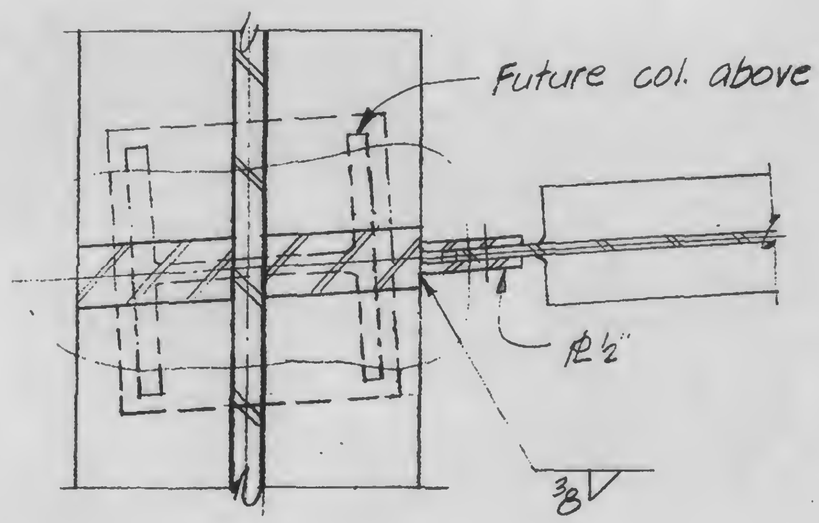

b

LICENSED PROFESSIONAL ENGINEER — LESLIE E. ROBERTSON — No. 34360 — UNIVERSITY OF THE STATE OF NEW YORK

DESIGNED

DRAWN

REVIEWED

13-K3.4-9