SKILLING, HELLE, CHRISTIANSEN, ROBERTSON — Structural & Civil Engineers

PROJECT: THE WORLD TRADE CENTER | TITLE: GIRDER DETAILS AT FUTURE COLUMNS | DATE: 11-3-72

REVISIONS

RELEASED FOR CONSTRUCTION 11-24-72

6-4-73

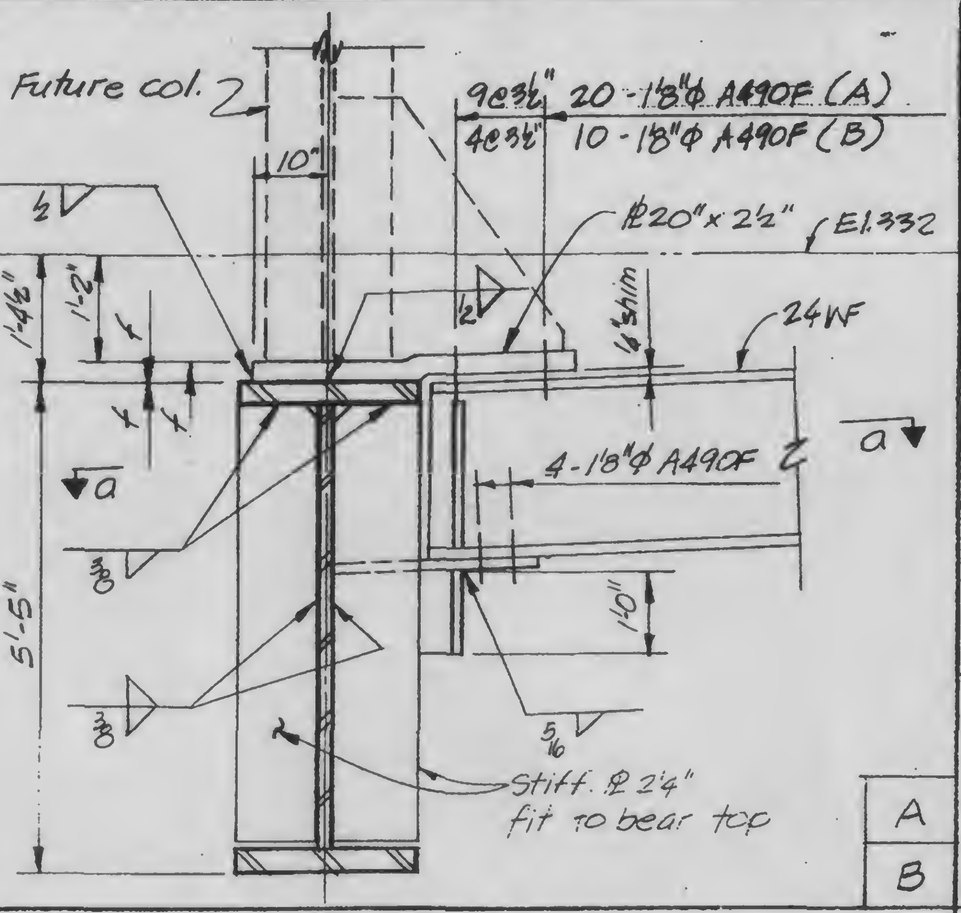

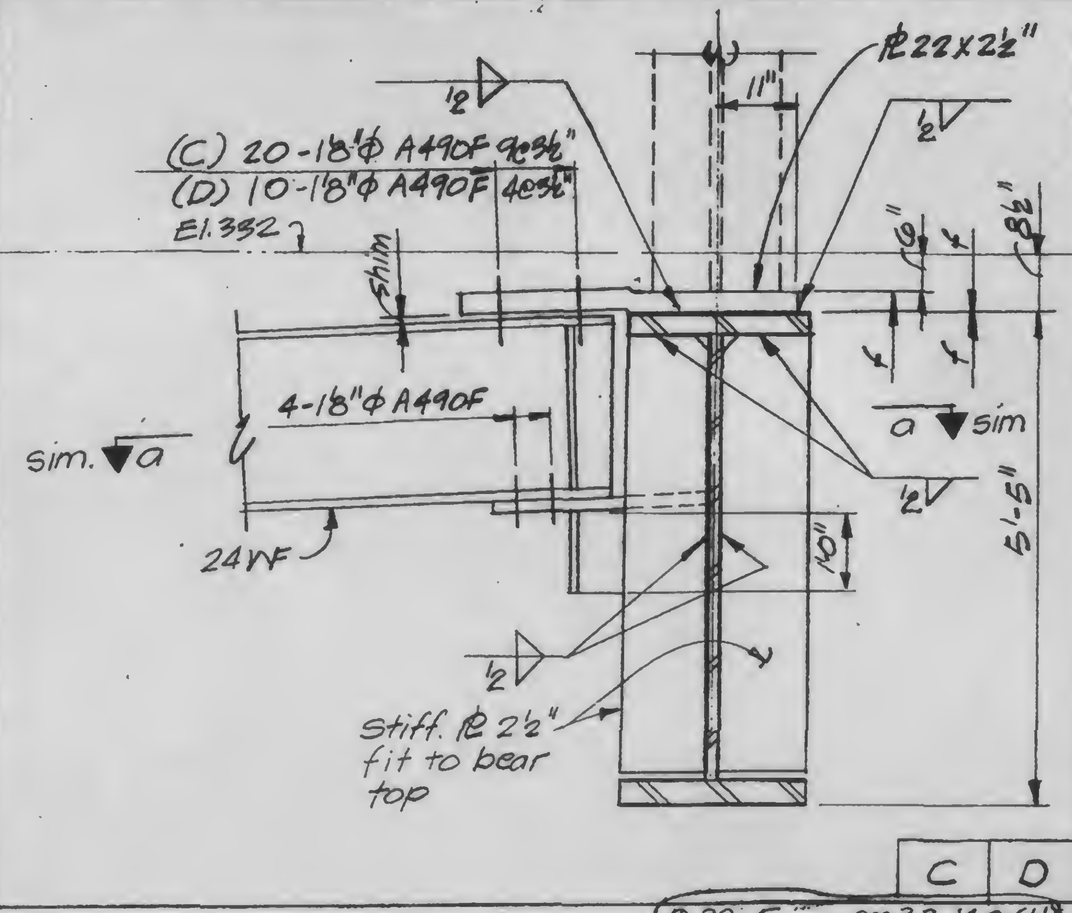

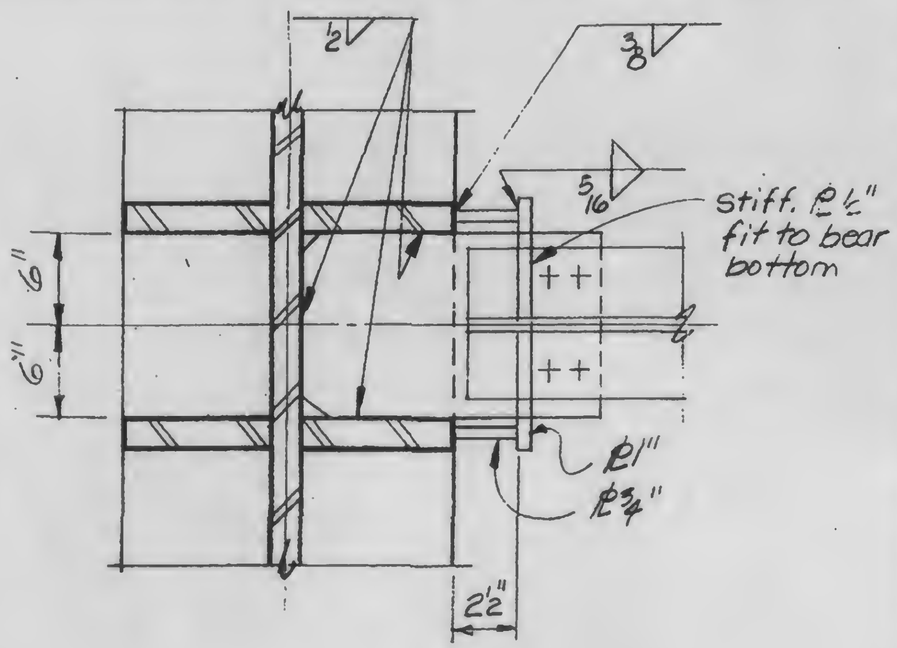

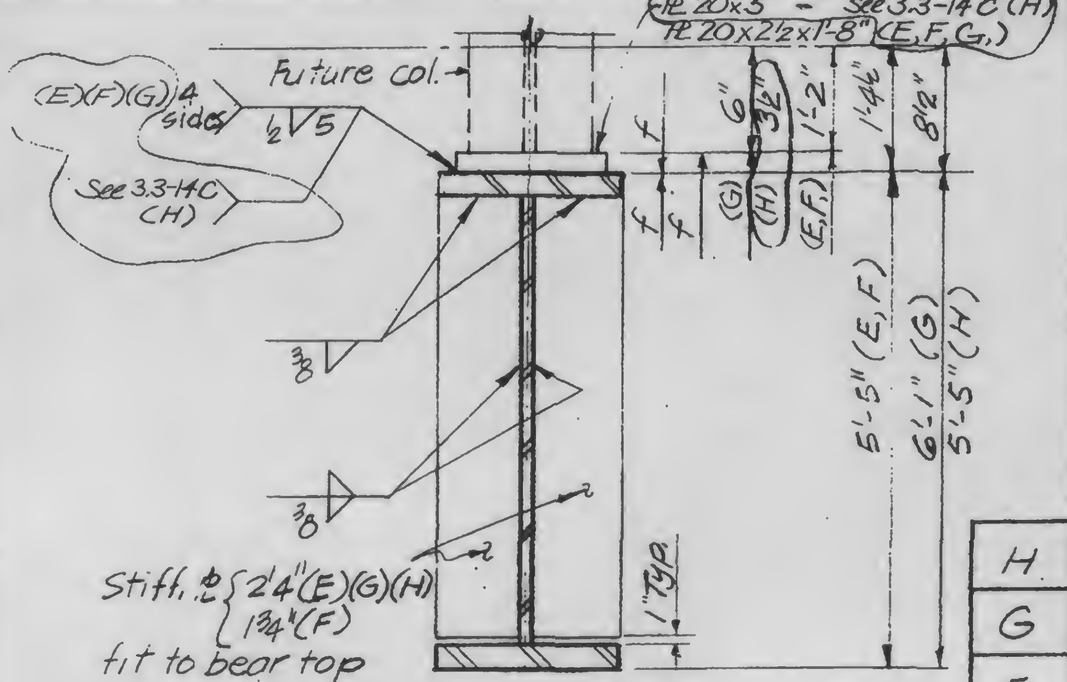

DESIGNED

DRAWN

REVIEWED

3-K 3.4-10