SKILLING, HELLE, CHRISTIANSEN, ROBERTSON — Structural & Civil Engineers

PROJECT: THE WORLD TRADE CENTER

TITLE: CONNECTIONS AT COLUMN

DATE: 11-3-72

REVISIONS

Released for construction 11-24-72

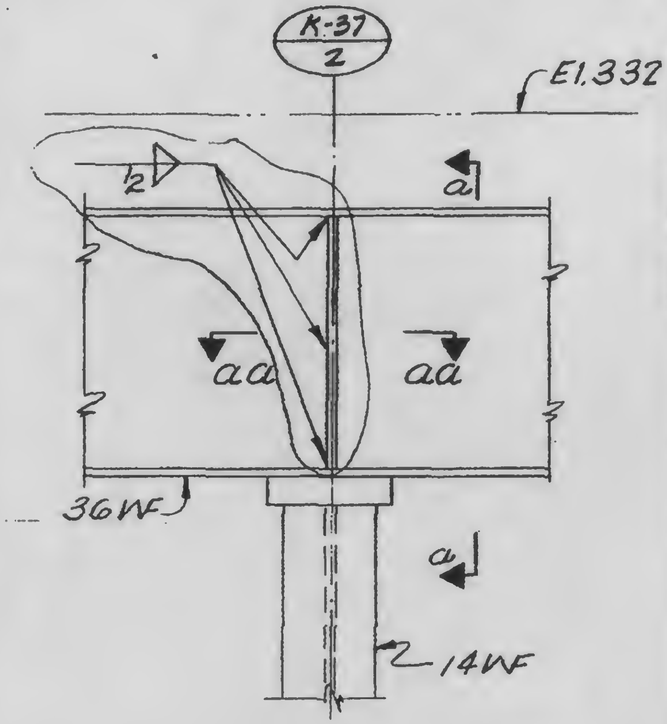

A

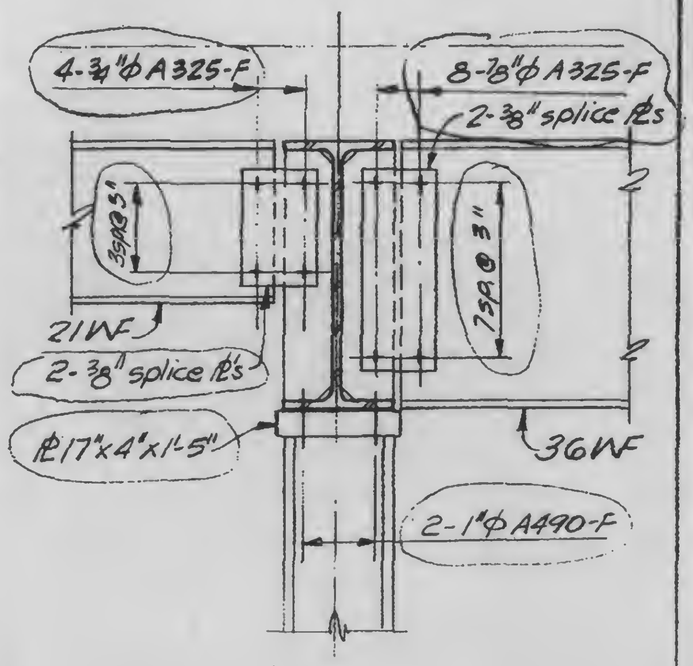

a aa

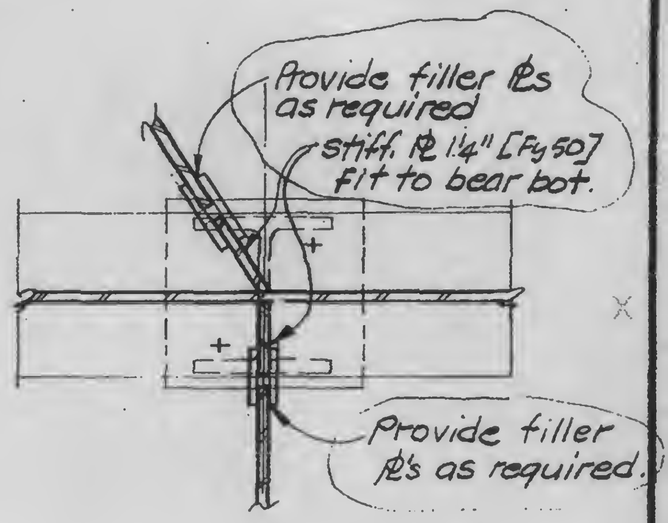

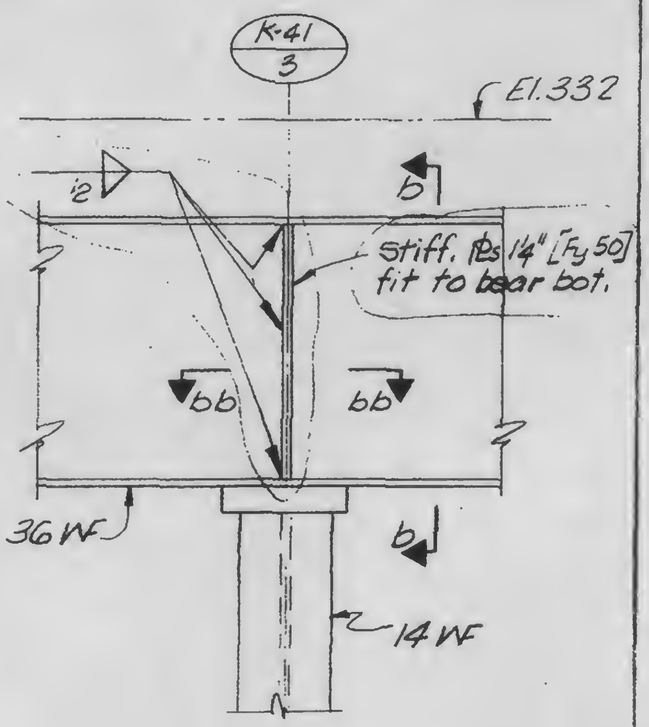

B

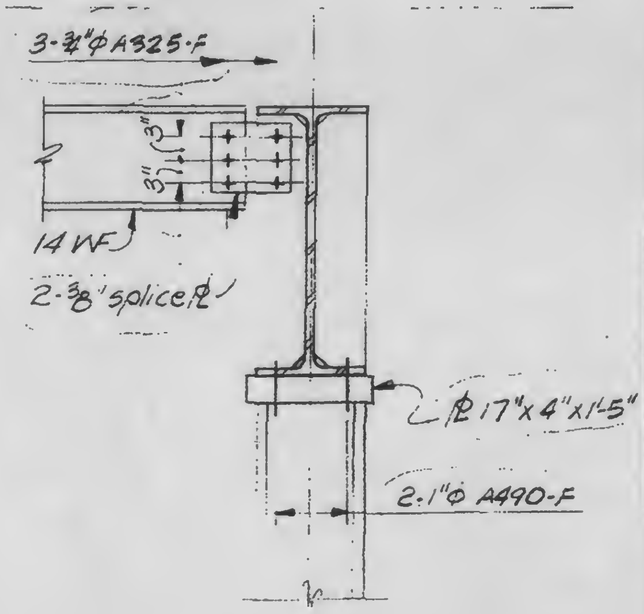

C cc

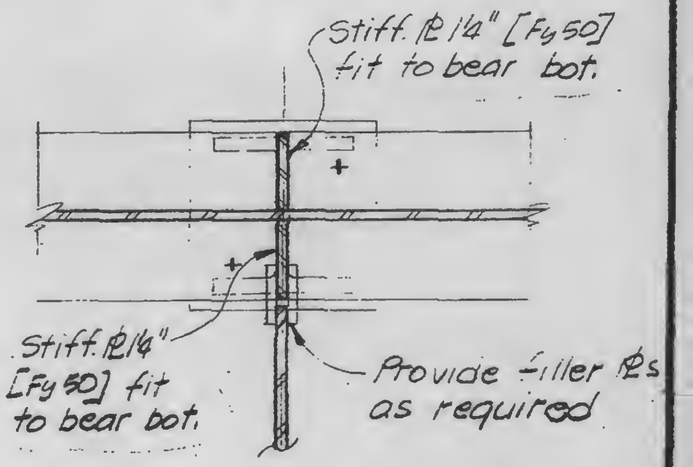

LICENSED PROFESSIONAL ENGINEER — LESLIE E. ROBERTSON — No. 34360 — UNIVERSITY OF THE STATE OF NEW YORK

DESIGNED: WAB

DRAWN: TR

REVIEWED:

13-K5.1-2