SKILLING, HELLE, CHRISTIANSEN, ROBERTSON — Structural & Civil Engineers

PROJECT: THE WORLD TRADE CENTER

TITLE: CONNECTION DETAILS AT CANOPY

DATE: 11-24-72

REVISIONS

Released for construction 11-24-72

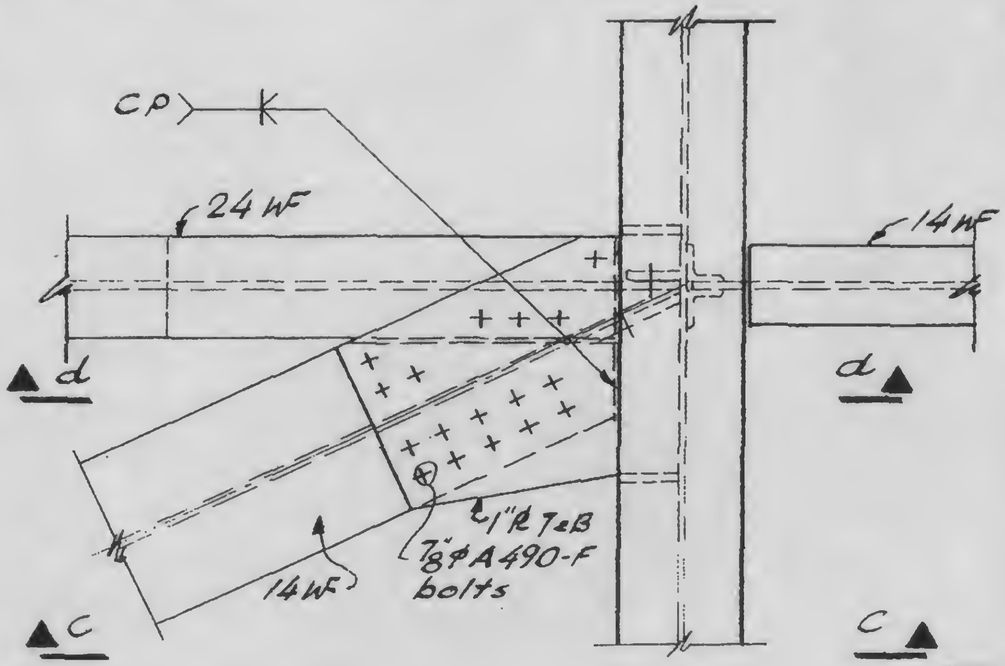

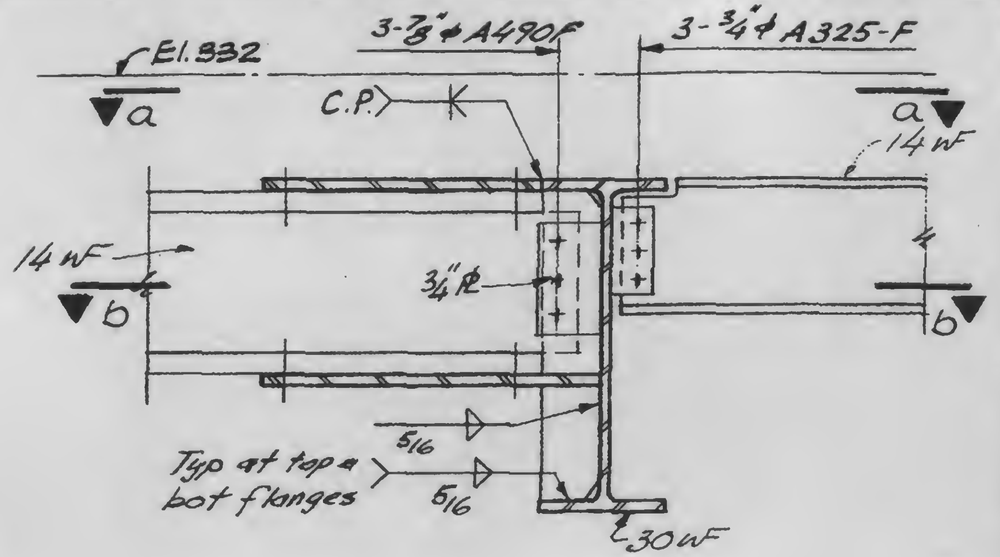

a | c

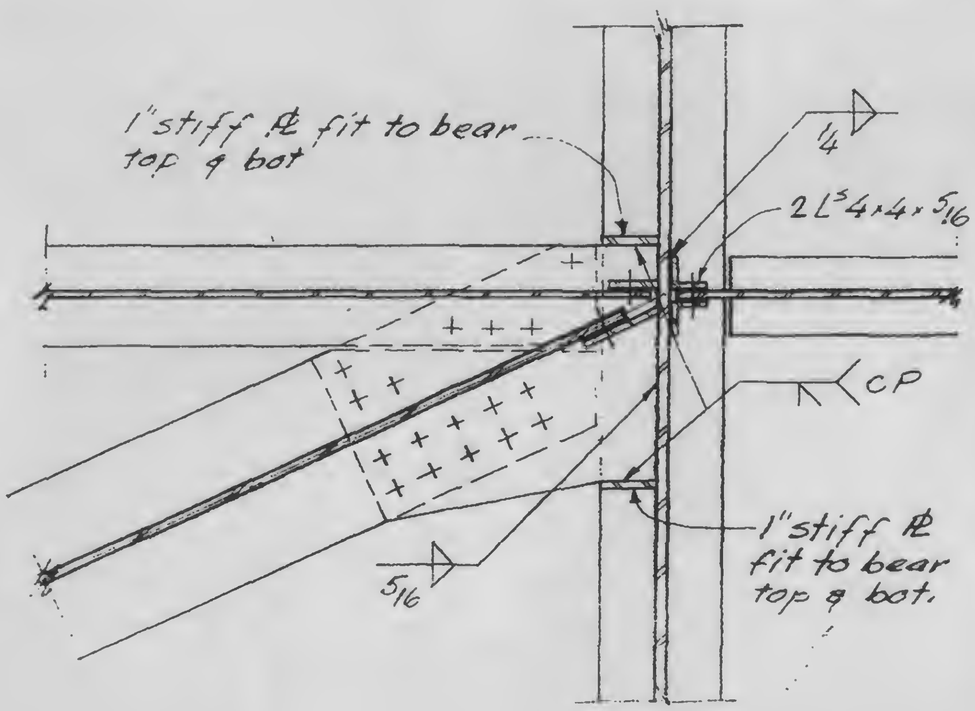

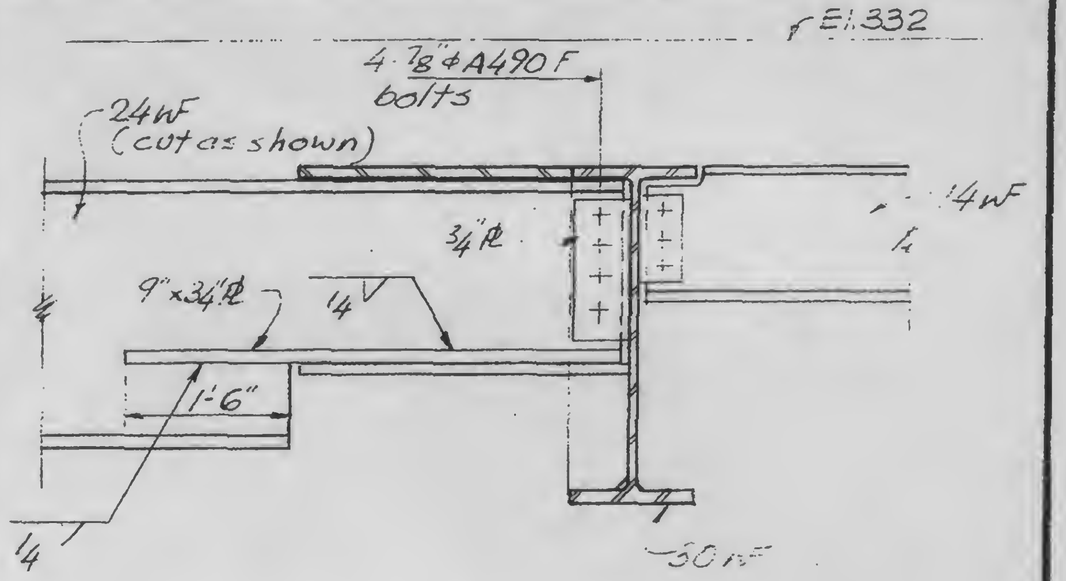

c | d

13-K5.3-4

LICENSED PROFESSIONAL ENGINEER — LESLIE E. ROBERTSON — No. 34360 — UNIVERSITY OF THE STATE OF NEW YORK

DESIGNED

DRAWN

REVIEWED