SKILLING, HELLE, CHRISTIANSEN, ROBERTSON — Structural & Civil Engineers

PROJECT: THE WORLD TRADE CENTER | TITLE: SLIDE CONNECTIONS TOWER B | DATE: 11-3-72

REVISIONS

Released for construction 11-20-72

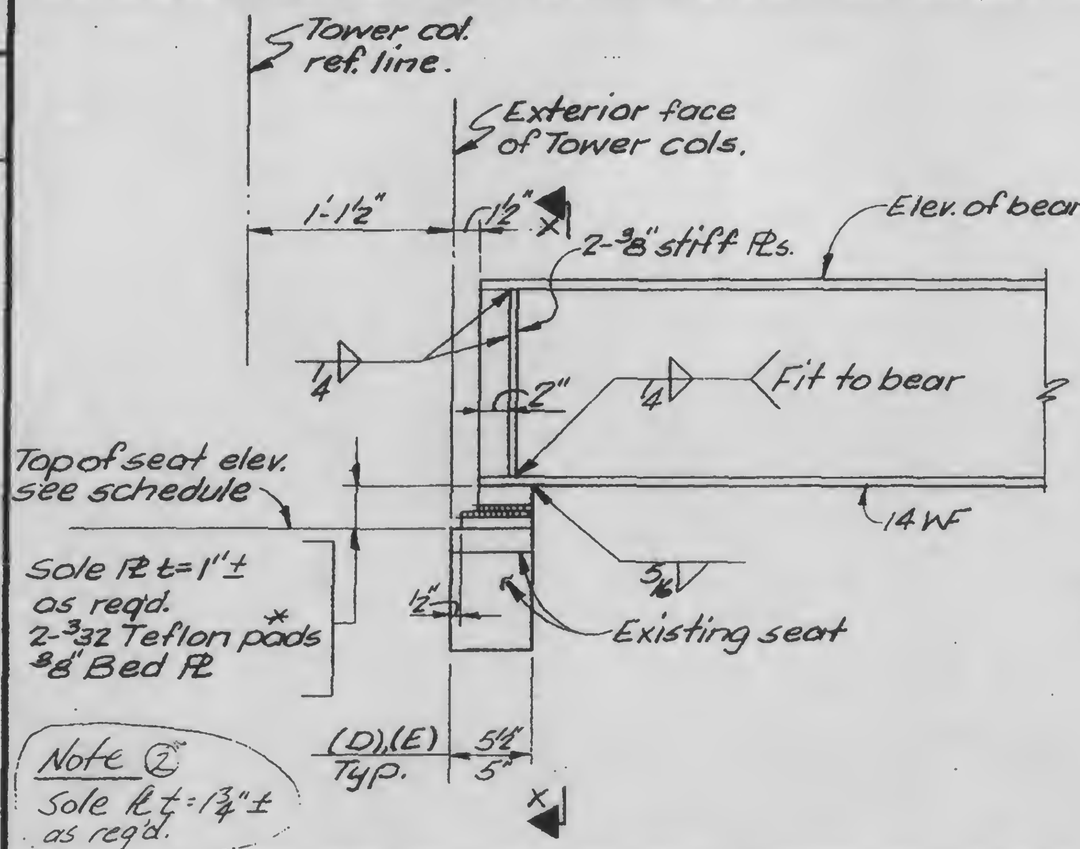

* Teflon pads to have a bearing capacity of 2000 psi.

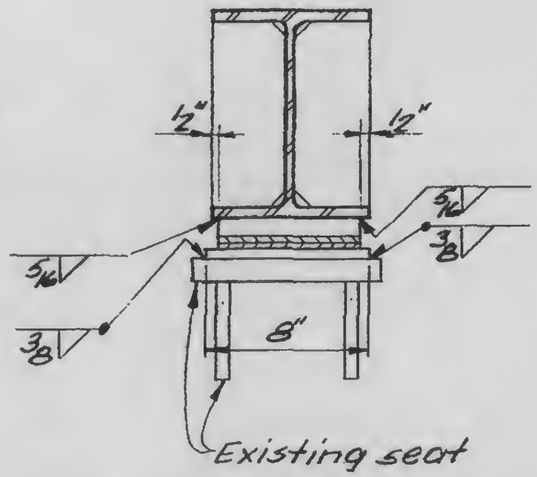

Section X-X

D
E
F
G
H
J
K
M

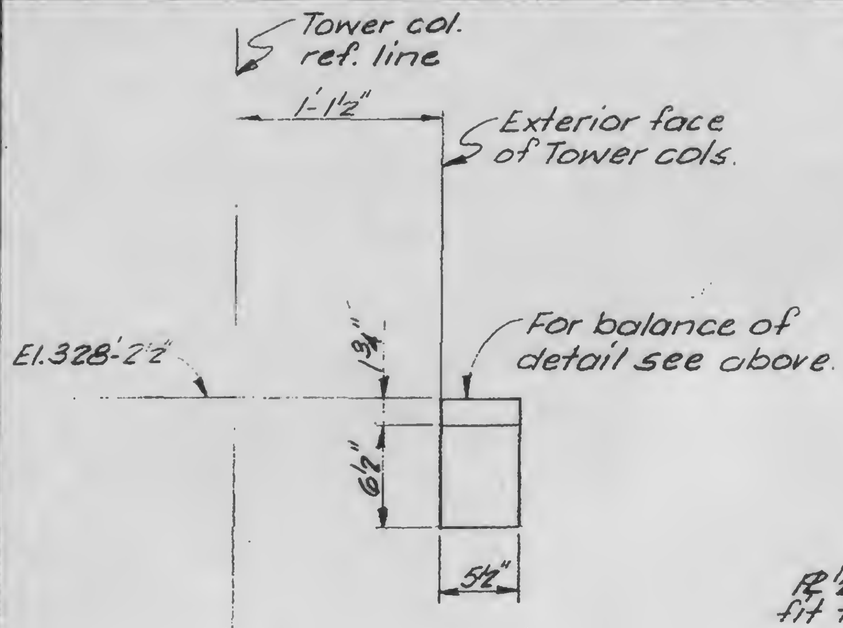

Note ①
Remove exist. seat and replace with new seat.

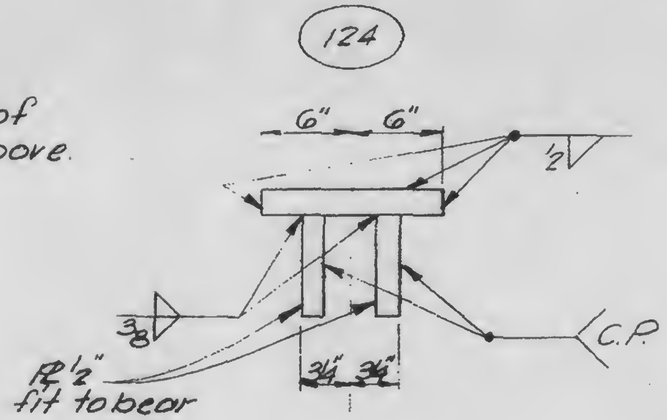

Schedule

Detail Number	Elevation Top of Seat
② D	329'-3⅝"
① E	328'-2½"
F	324'-1"
G	322'-8½"
H	318'-7"
J	317'-2½"
K	313'-1"
M	311'-8½"

LICENSED PROFESSIONAL ENGINEER — LESLIE E. ROBERTSON — No. 34360 — UNIVERSITY OF THE STATE OF NEW YORK

DESIGNED

DRAWN TR

REVIEWED

E

13-KG.1-1