SKILLING, HELLE, CHRISTIANSEN, ROBERTSON — Structural & Civil Engineers

PROJECT: THE WORLD TRADE CENTER | TITLE: HANGER DETAILS ABOVE MECHANICAL PLATFORM | DATE: 11-3-72

REVISIONS

Released for construction 11-24-72

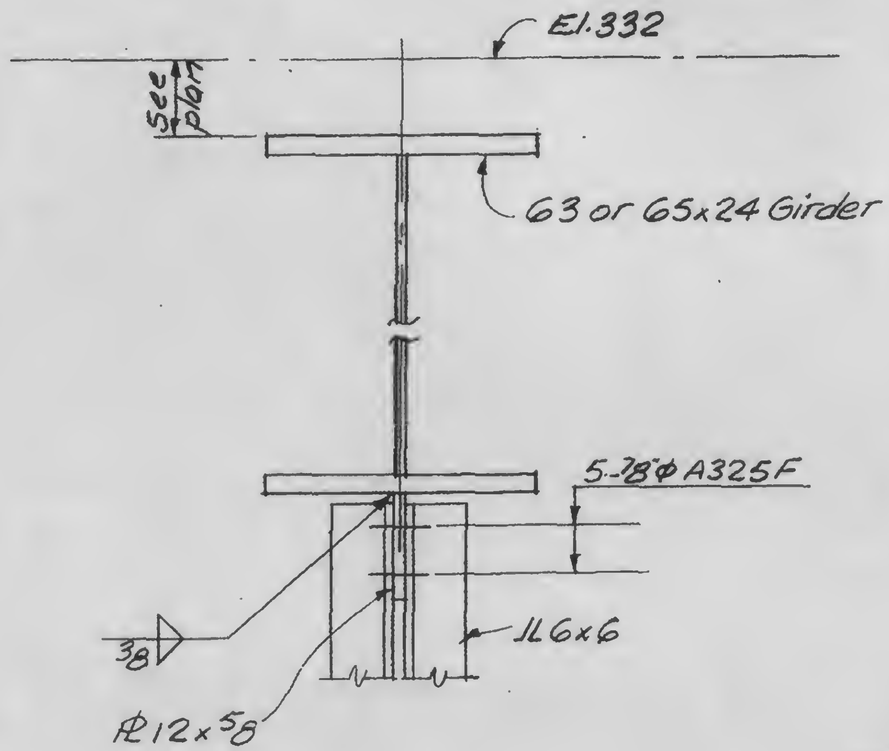

A

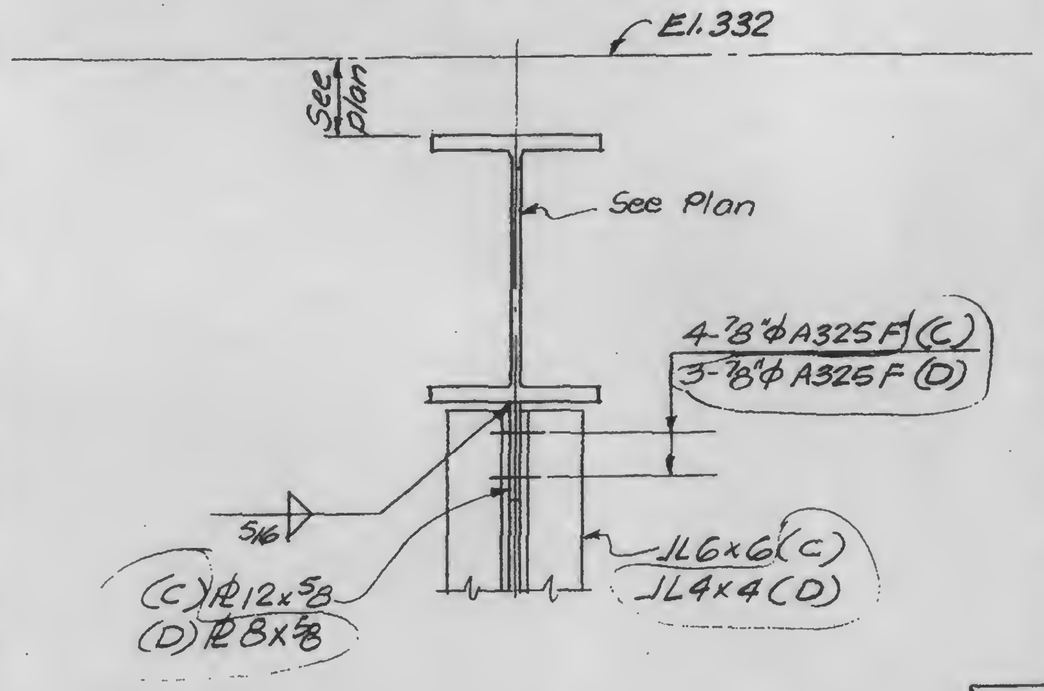

C

D

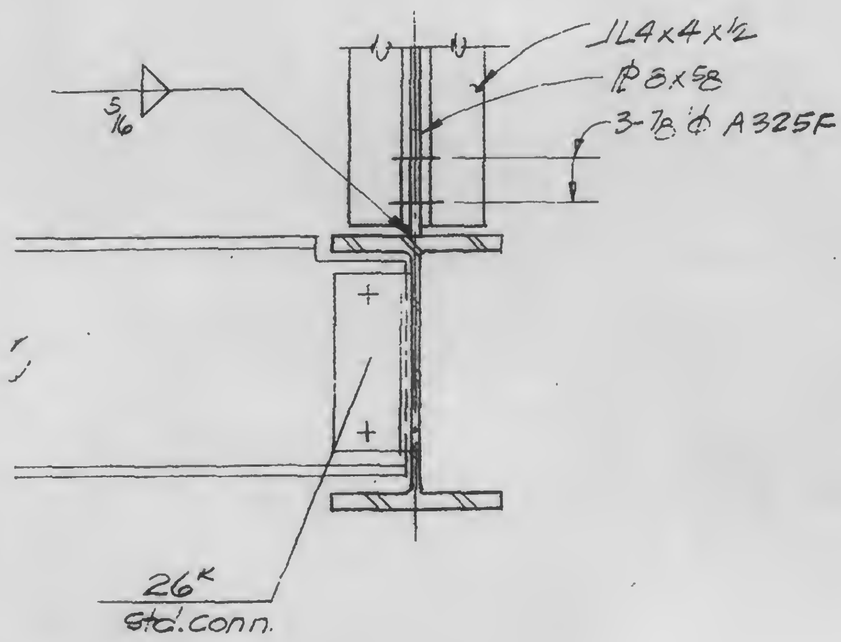

E

13-KB.1-2

LICENSED PROFESSIONAL ENGINEER
LESLIE E. ROBERTSON
No. 34360
UNIVERSITY OF THE STATE OF NEW YORK

DESIGNED

DRAWN
A.L. Franqui

REVIEWED