SKILLING, HELLE, CHRISTIANSEN, ROBERTSON — Structural [illegible]

PROJECT: THE WORLD TRADE CENTER | TITLE: CONNECTION DETAILS - INTERMEDIATE LEVEL | DATE: 11-3-72

REVISIONS

Released for construction 11-24-72

2-5-73

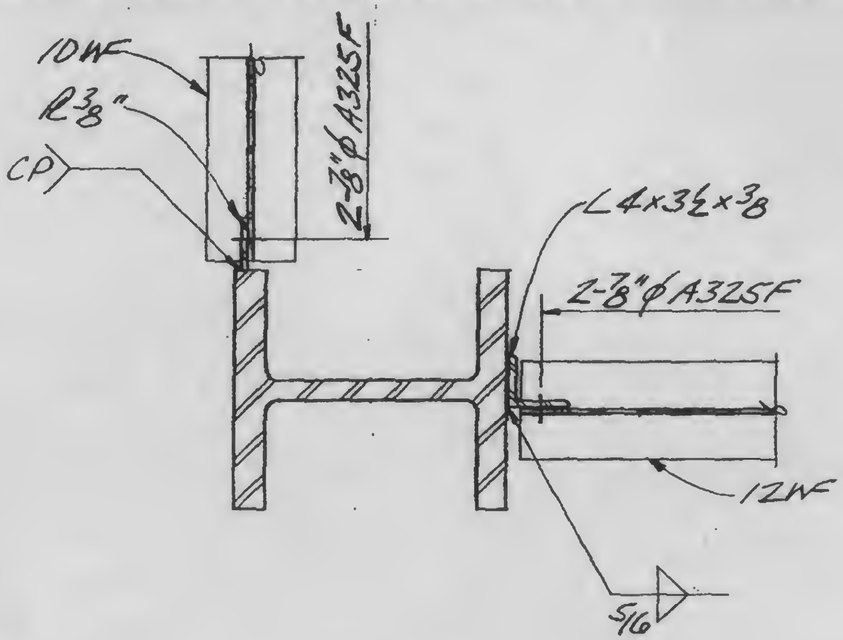

A

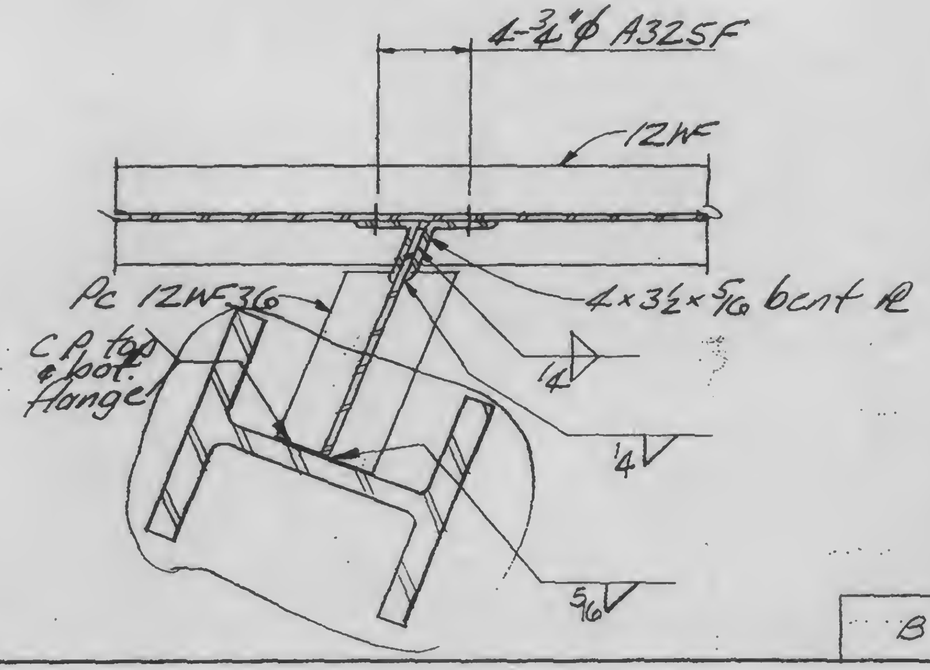

B

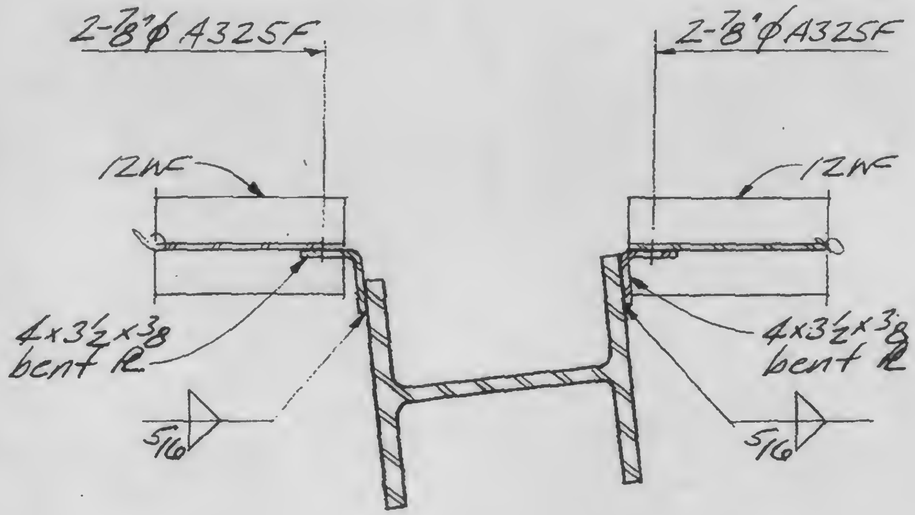

C

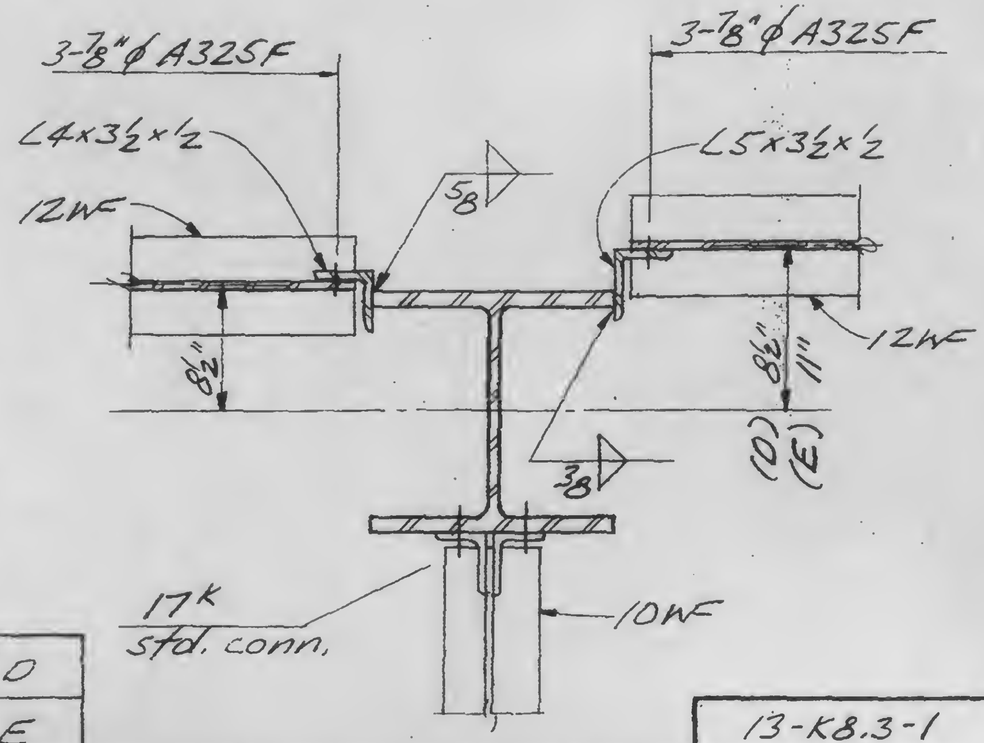

D

E

13-K8.3-1

LICENSED PROFESSIONAL ENGINEER — LESLIE E. ROBERTSON — No. 34360 — UNIVERSITY OF THE STATE OF NEW YORK

DESIGNED

DRAWN

REVIEWED