SKILLING, HELLE, CHRISTIANSEN, ROBERTSON — Structural & Civil Engineers

PROJECT: THE WORLD TRADE CENTER | TITLE: SECTION AT ESCALATOR - EL. 294'-0" | DATE: 3-15-73

REVISIONS

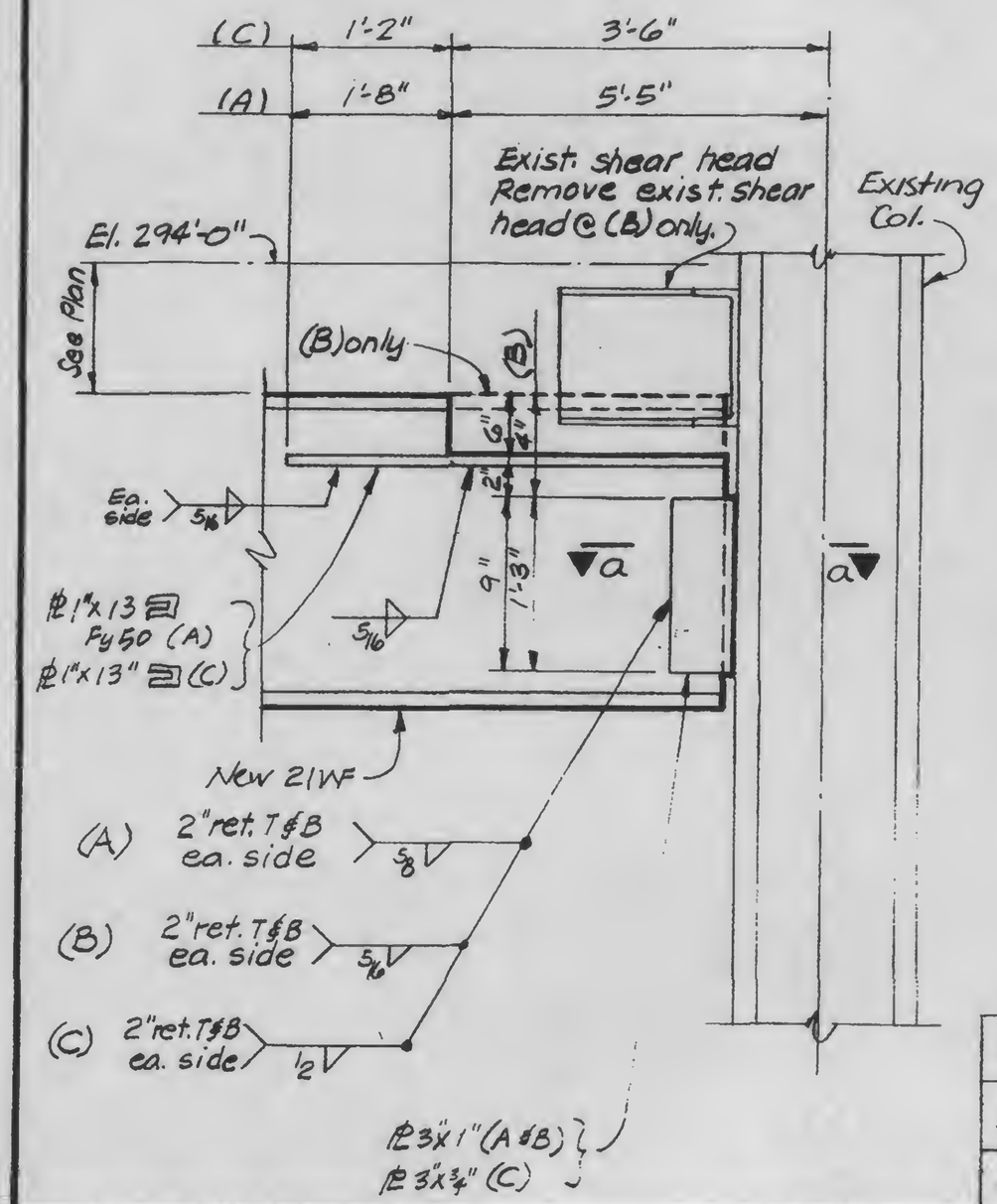

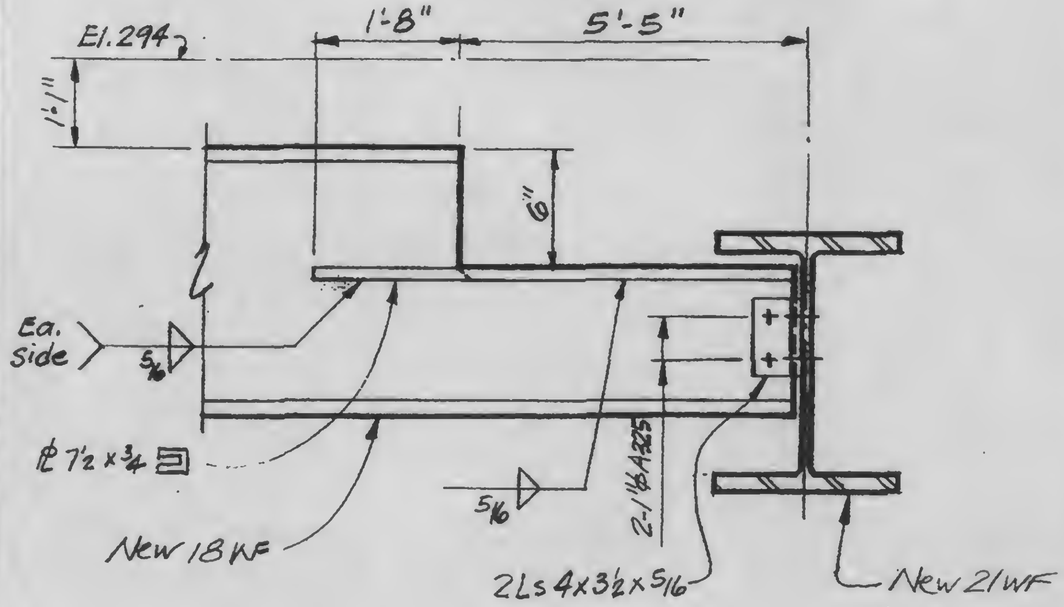

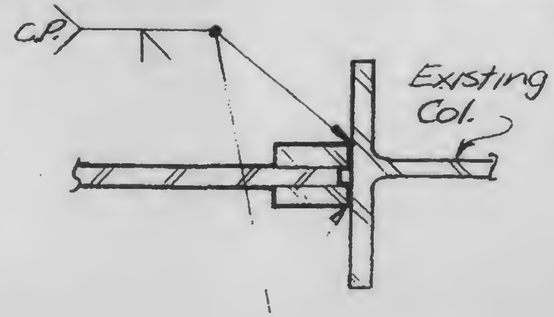

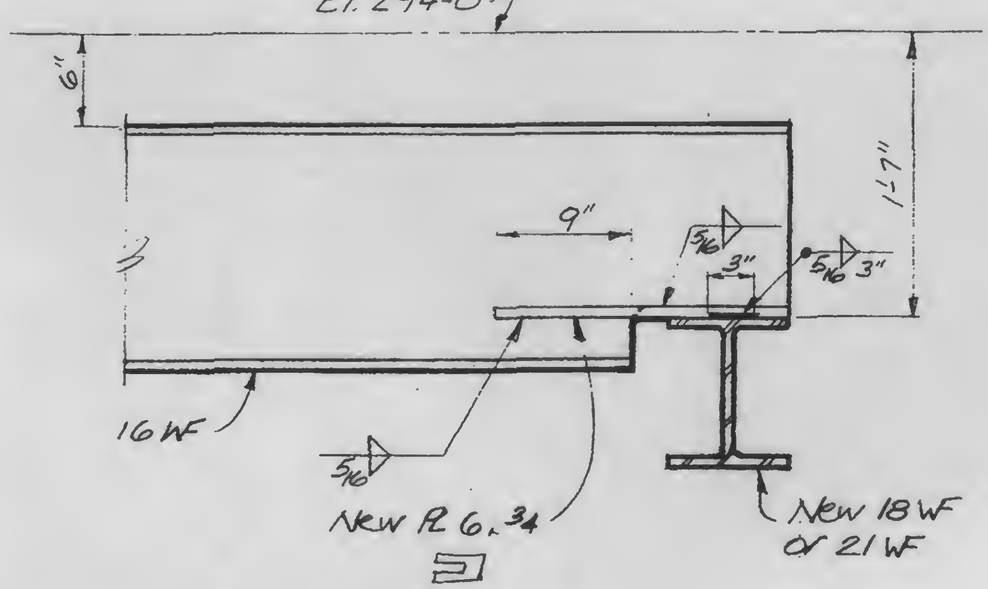

LICENSED PROFESSIONAL ENGINEER — LESLIE E. ROBERTSON — No. 34360 — UNIVERSITY OF THE STATE OF NEW YORK

DESIGNED KC

DRAWN

REVIEWED

A B C

a E

D

13-K10.2-1