SKILLING, HELLE, CHRISTIANSEN, ROBERTSON — Structural & Civil Engineers

PROJECT: THE WORLD TRADE CENTER | TITLE: EL. 310 - ZONE K3 - "H" ELEV. - CONN DETAILS | DATE: 5-7-73

REVISIONS

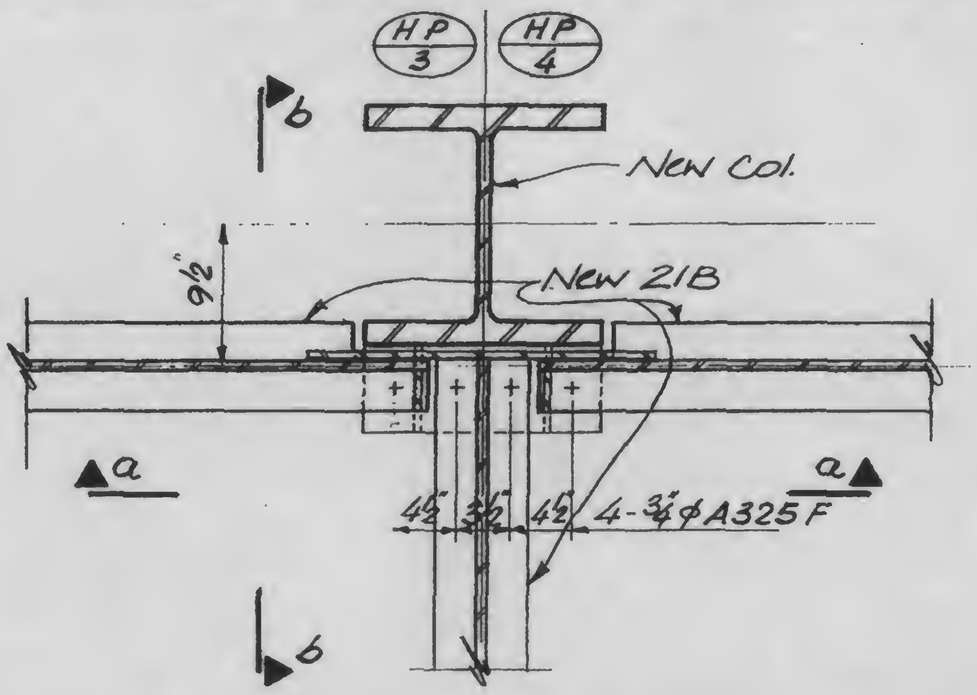

A

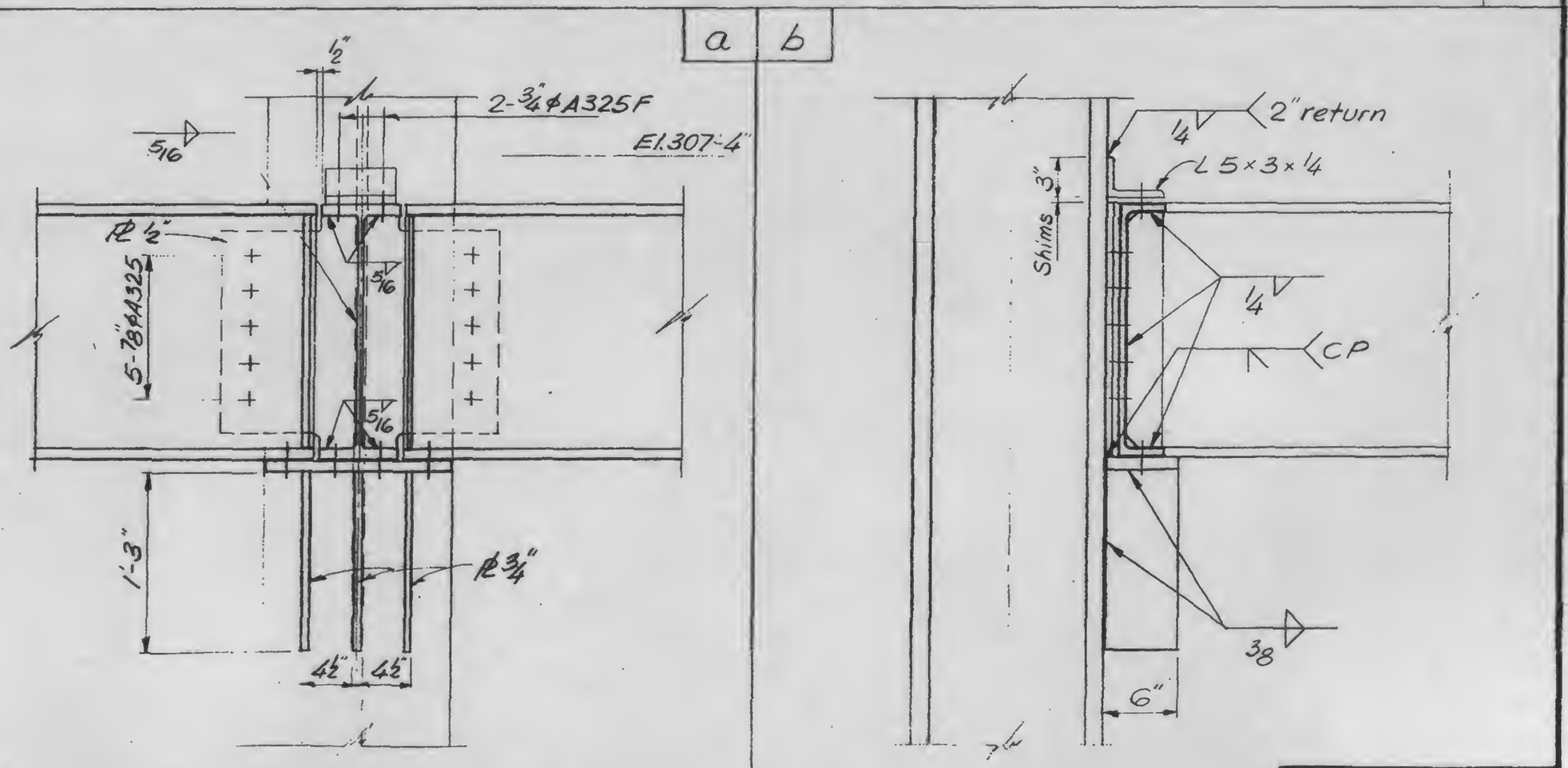

LICENSED PROFESSIONAL ENGINEER
LESLIE E. ROBERTSON
No 34360
UNIVERSITY OF THE STATE OF NEW YORK

DESIGNED: K. Chiang
DRAWN: John Gnaus
REVIEWED: [illegible]

13-K11 1-31