SKILLING, HELLE, CHRISTIANSEN, ROBERTSON — Structural & Civil Engineers

PROJECT: THE WORLD TRADE CENTER

TITLE: EL 310 - ZONE K1 - NEW OPENINGS - CONN. DETAILS

DATE: 5-7-73

REVISIONS

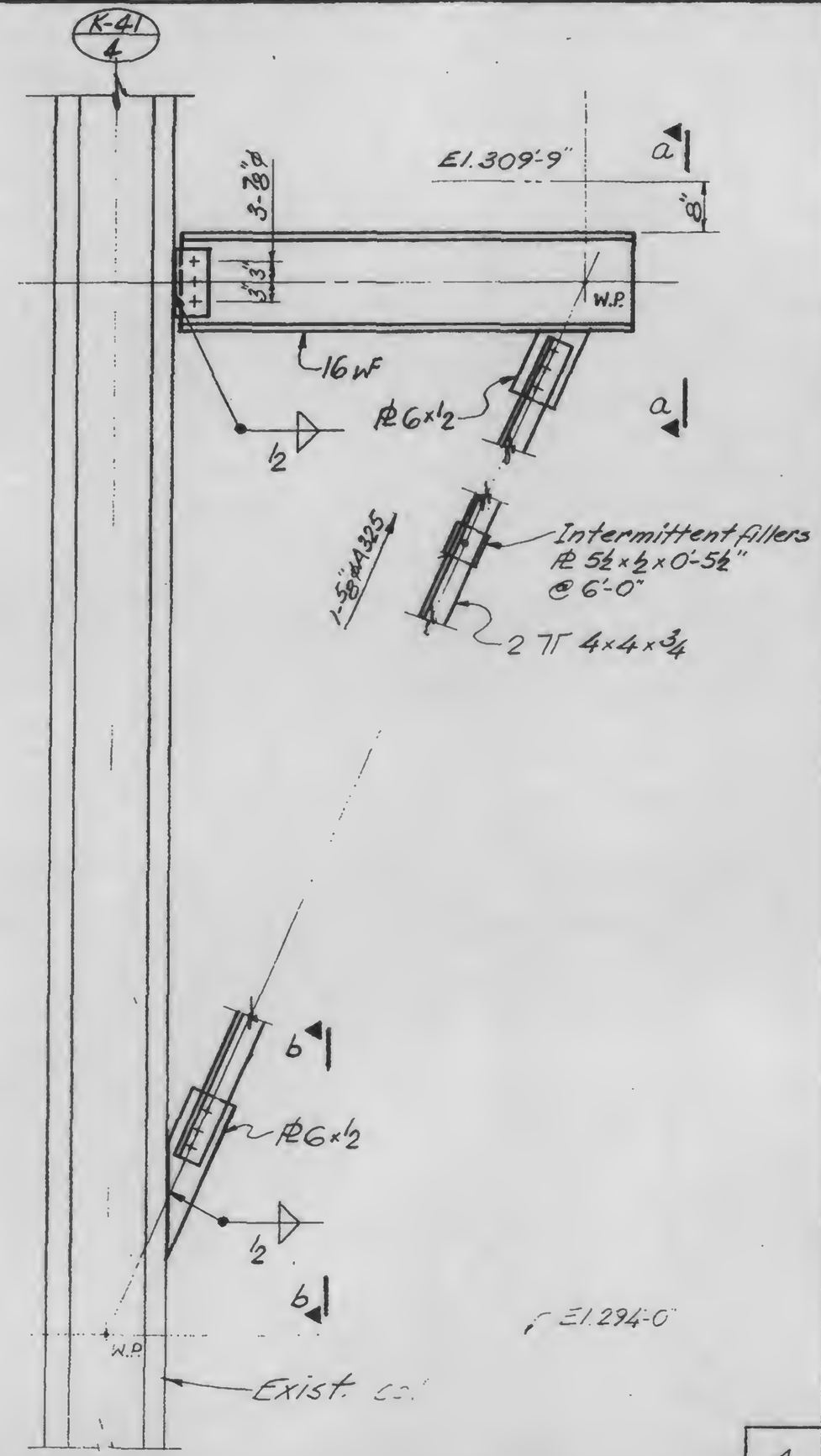

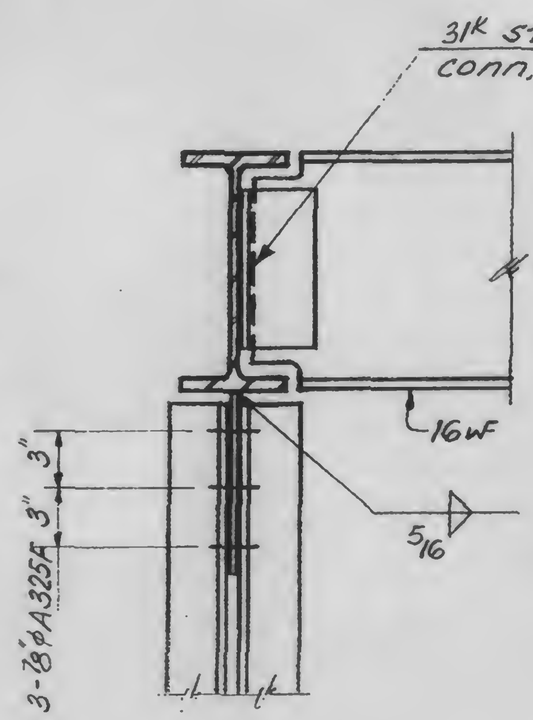

a

b

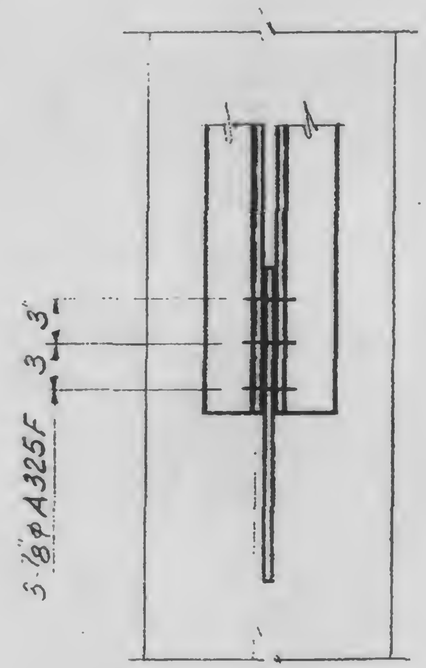

LICENSED PROFESSIONAL ENGINEER
LESLIE E. ROBERTSON
No. 34960
UNIVERSITY OF THE STATE OF NEW YORK

DESIGNED

DRAWN

REVIEWED

A

13-K11.1-5.1.