SKILLING, HELLE, CHRISTIANSEN, ROBERTSON — Structural & Civil Engineers

PROJECT THE WORLD TRADE CENTER | TITLE EL. 310 - ZONE K5-STAIR 8-CONN. DETAIL | DATE 5-7-73

REVISIONS

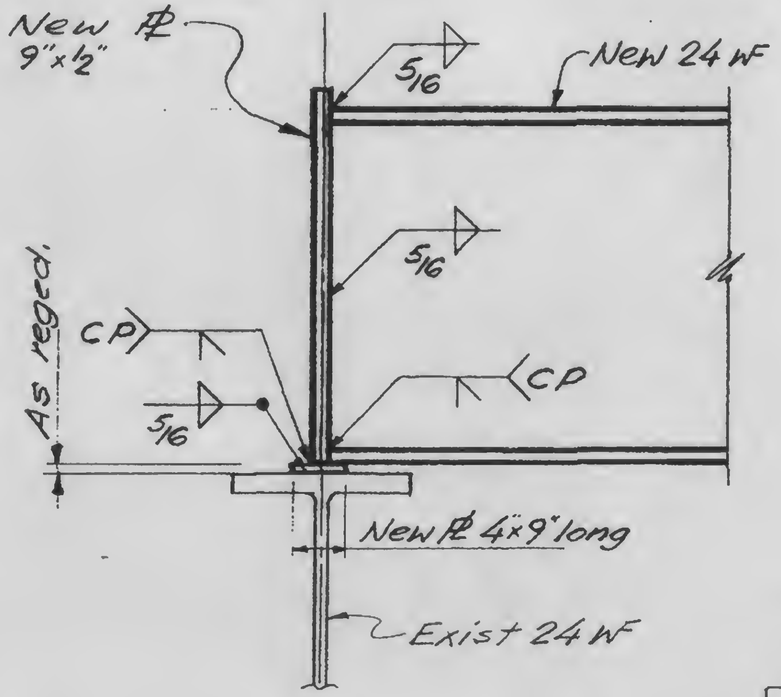

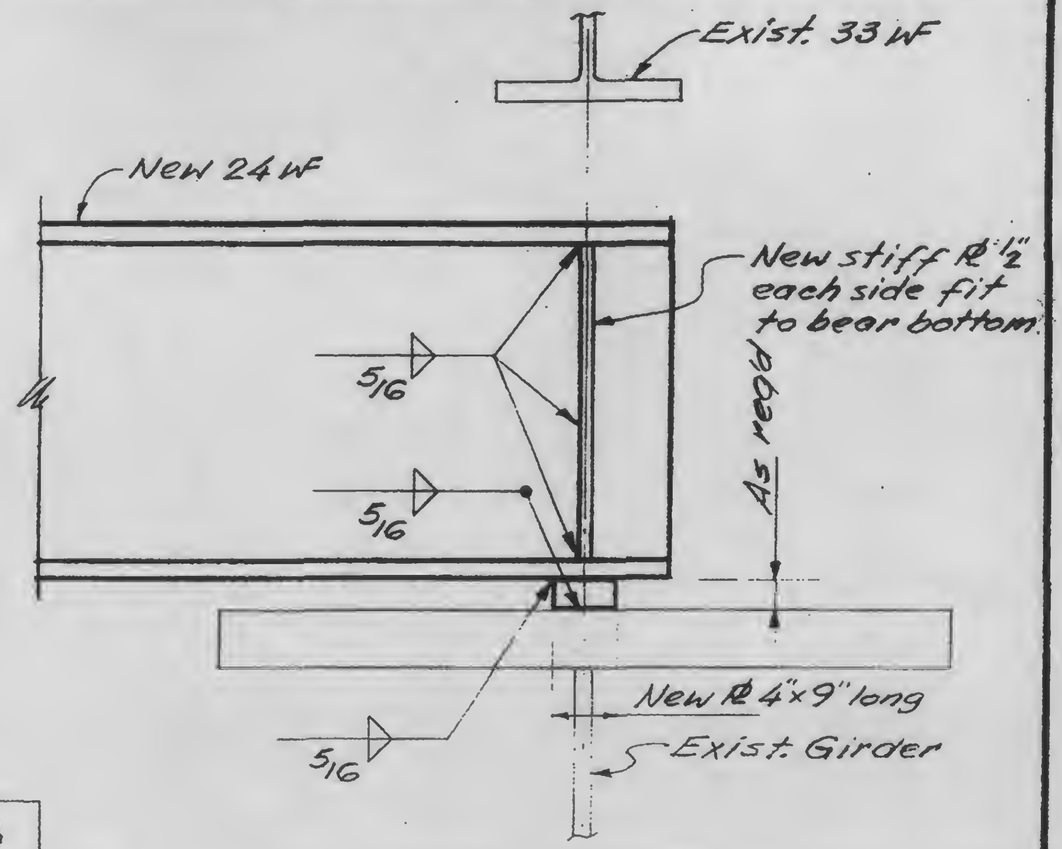

A | B

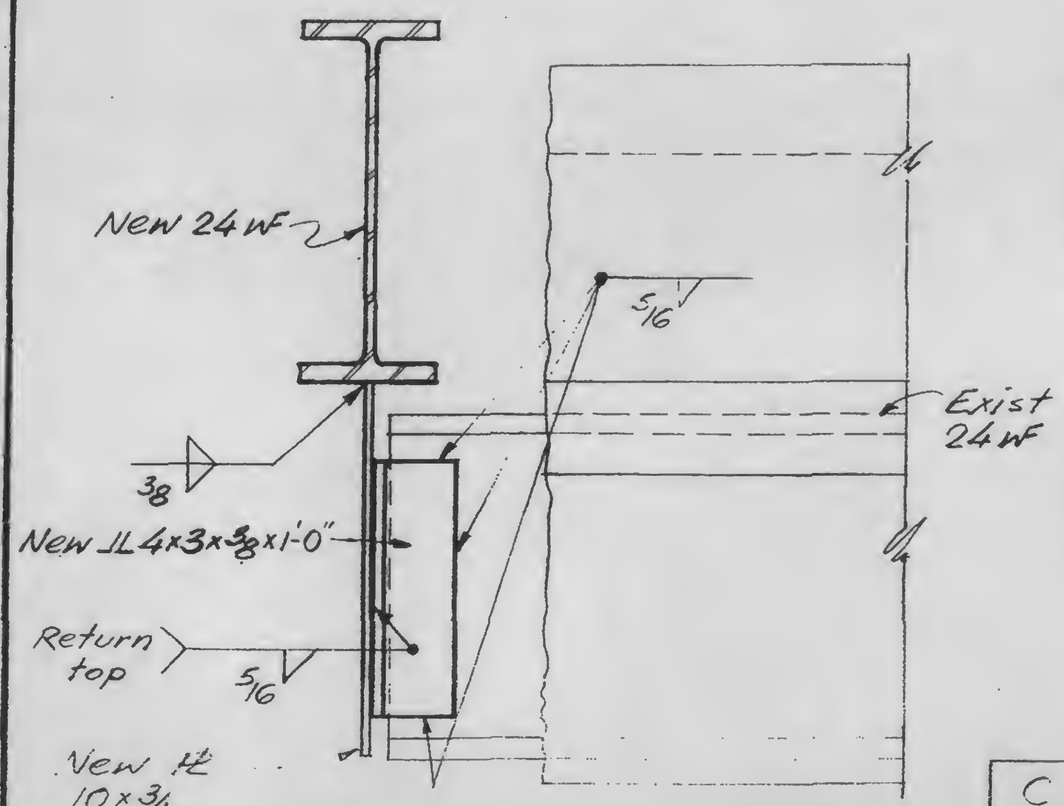

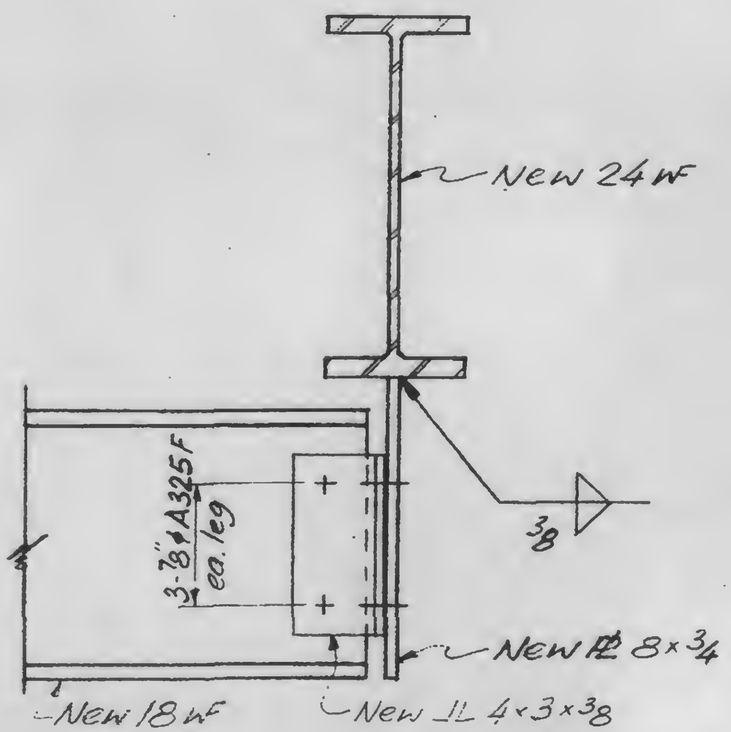

C | D

LICENSED PROFESSIONAL ENGINEER — LESLIE E. ROBERTSON — No. 34360 — UNIVERSITY OF THE STATE OF NEW YORK

DESIGNED

DRAWN John Grieves

REVIEWED LER

13-K11.2-2.1