SKILLING, HELLE, CHRISTIANSEN, ROBERTSON — Structural & Civil Engineers

PROJECT THE WORLD TRADE CENTER | TITLE EL 310 - ZONE K5 - STAIR 8 - CONN. DET. | DATE 5-7-73

REVISIONS

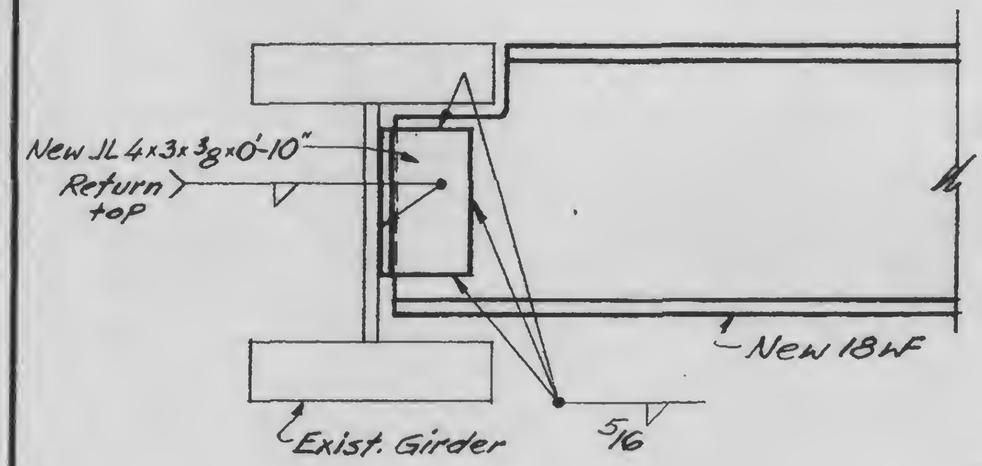

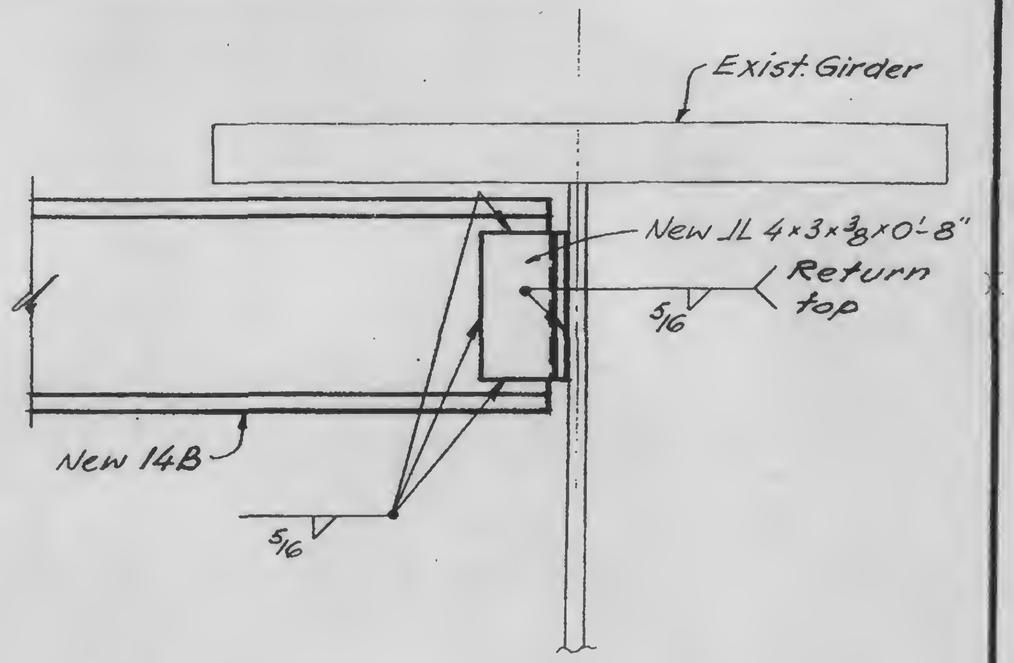

E | F

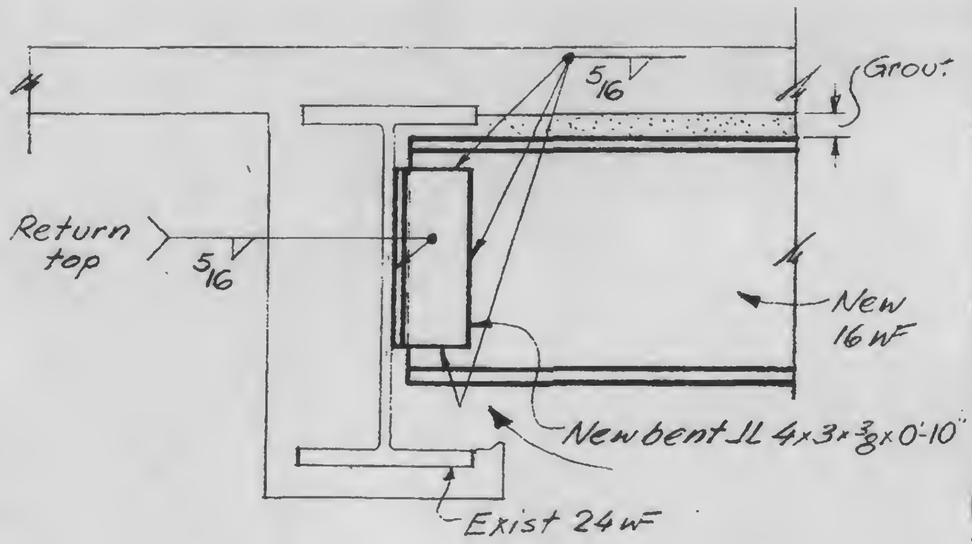

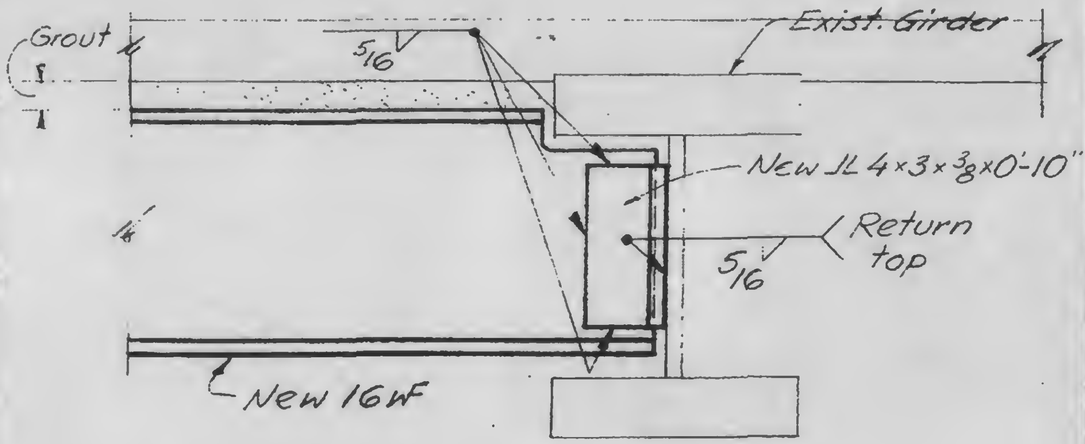

Exist conc. fireproofing removed as reqd.

G | H

LICENSED PROFESSIONAL ENGINEER
LESLIE E. ROBERTSON
No. 34360
UNIVERSITY OF THE STATE OF NEW YORK

DESIGNED

DRAWN John Greene

REVIEWED Wat

13-K11.2-2.2