SKILLING, HELLE, CHRISTIANSEN, ROBERTSON — Structural & Civil Engineers

PROJECT: THE WORLD TRADE CENTER

TITLE: EL. 310 - ZONE K5 - SERVICE ELEV. - CONN. DETAILS

DATE: 5-7-73

REVISIONS

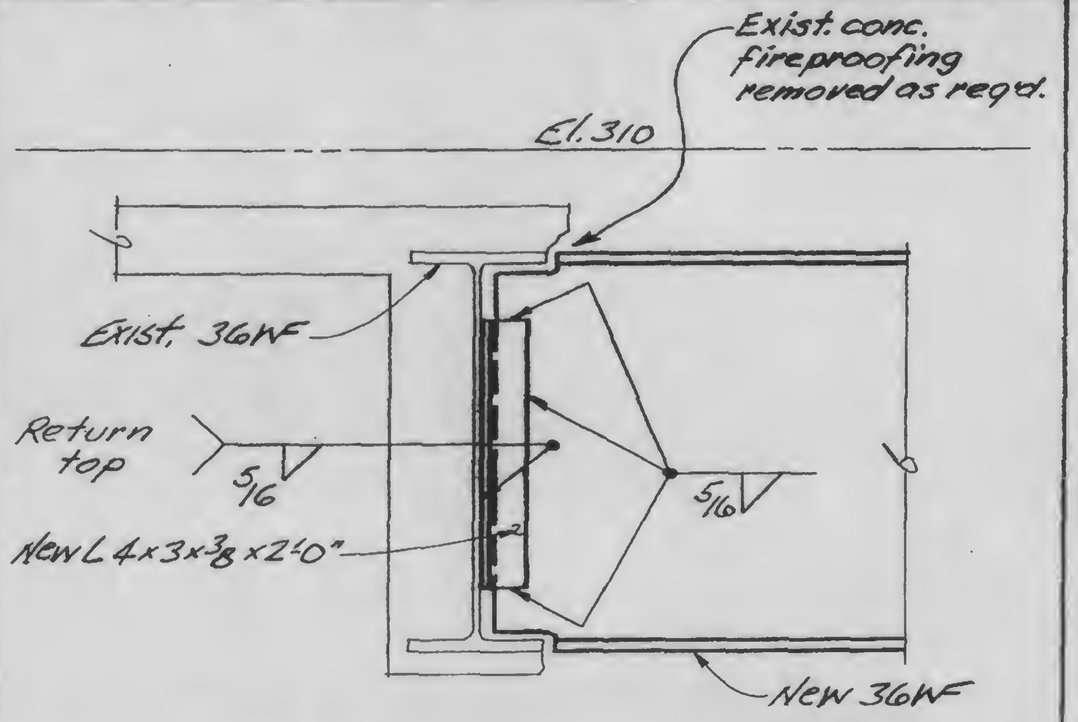

C

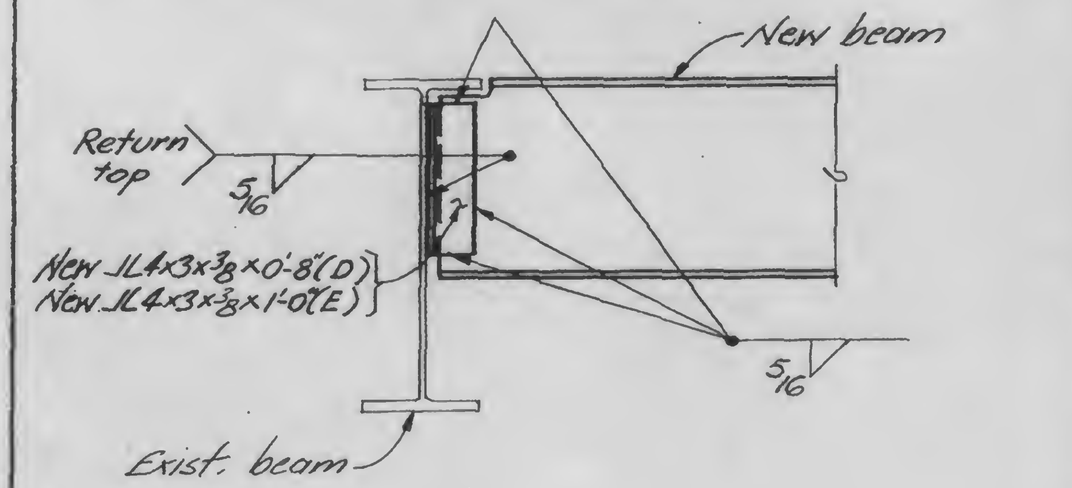

D

E

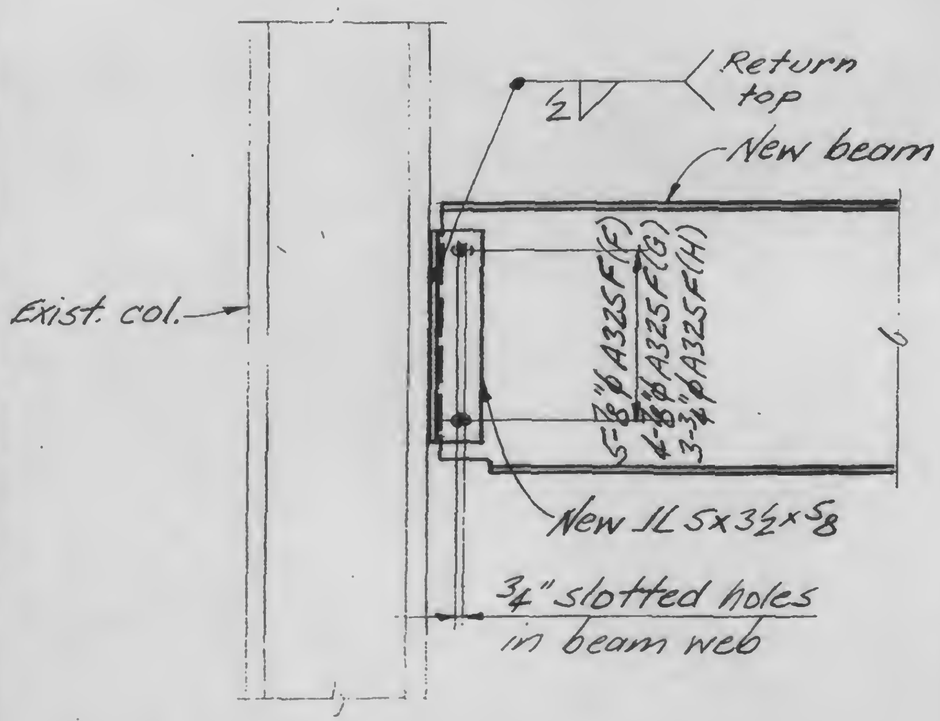

F

G

H

K

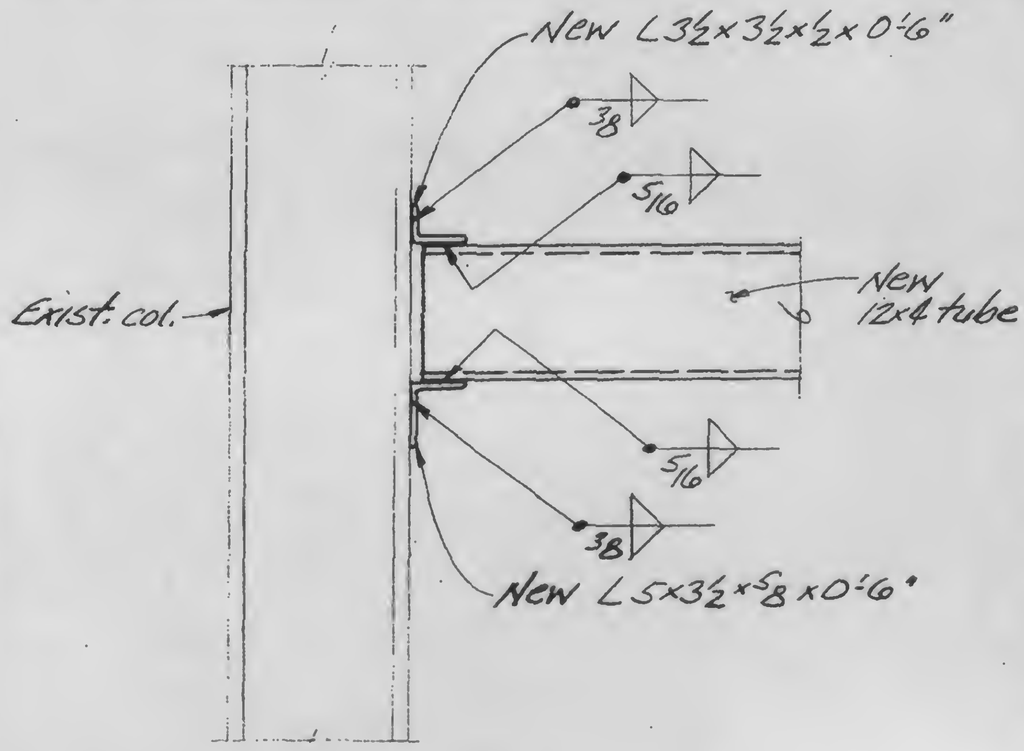

LICENSED PROFESSIONAL ENGINEER
LESLIE E. ROBERTSON
No. 34360
UNIVERSITY OF THE STATE OF NEW YORK

DESIGNED

DRAWN J. A.

REVIEWED

13-K-11.2-4.2