SKILLING, HELLE, CHRISTIANSEN, ROBERTSON — Structural & Civil Engineers

PROJECT: THE WORLD TRADE CENTER | TITLE: EL 310 - ZONE K3 - ESC. H3 & 4 - CONN. DETAILS | DATE: 5-7-73

REVISIONS

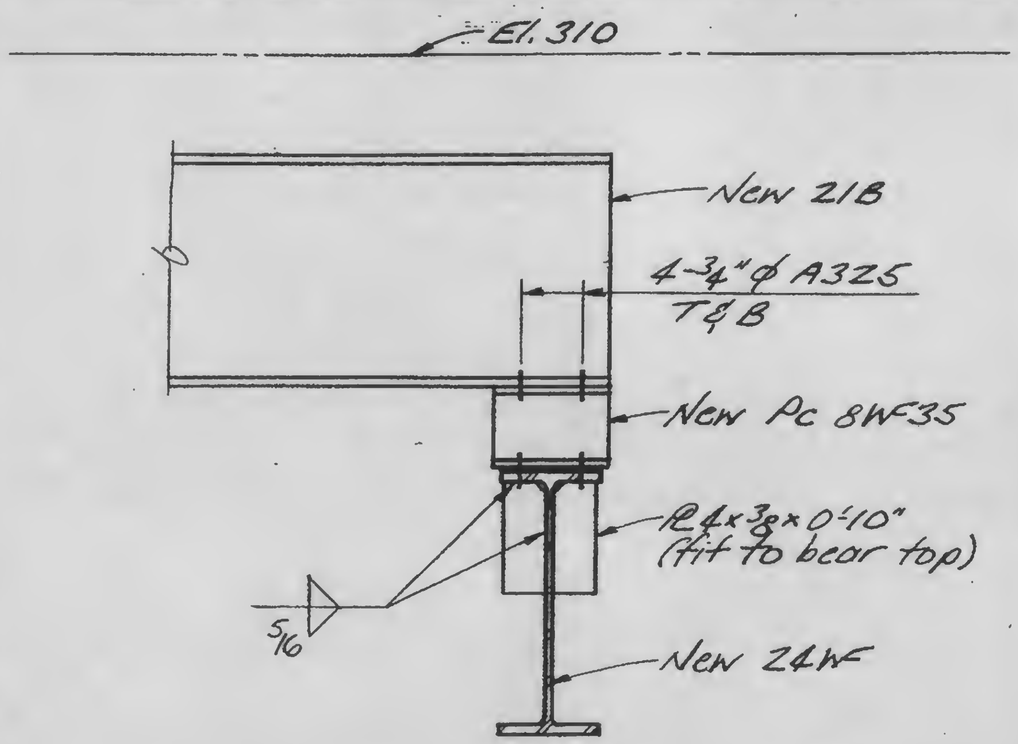

A

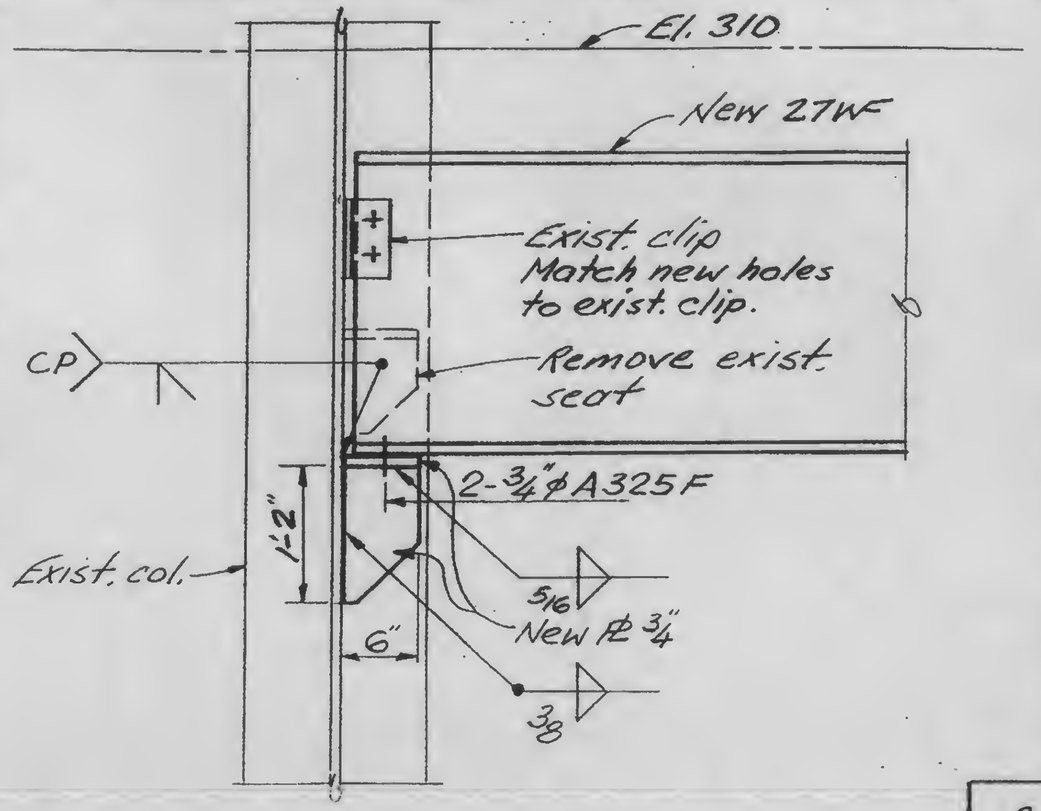

B

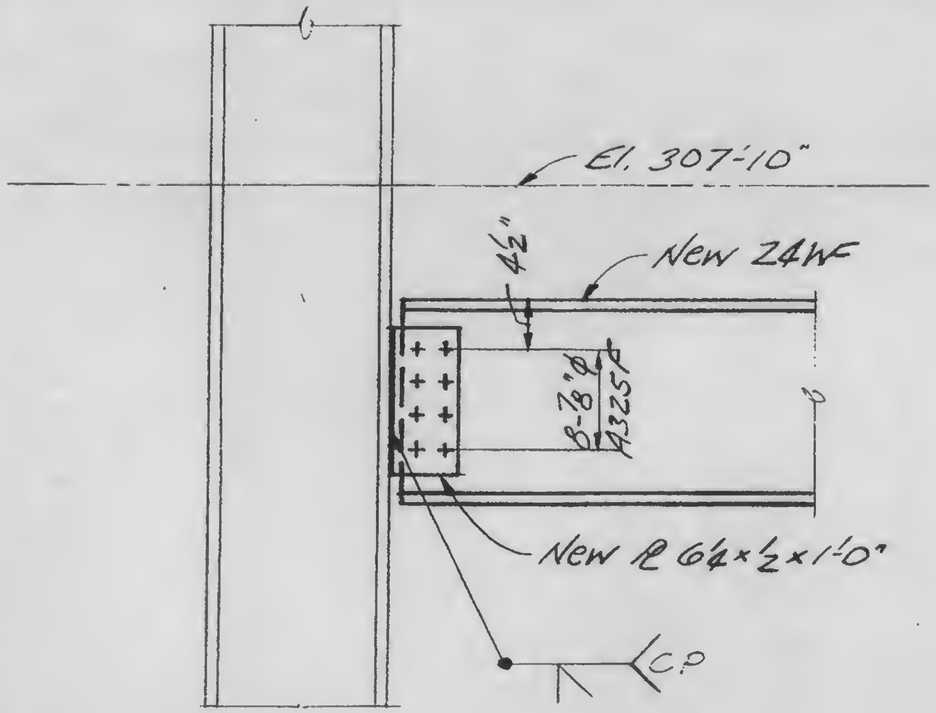

C

D

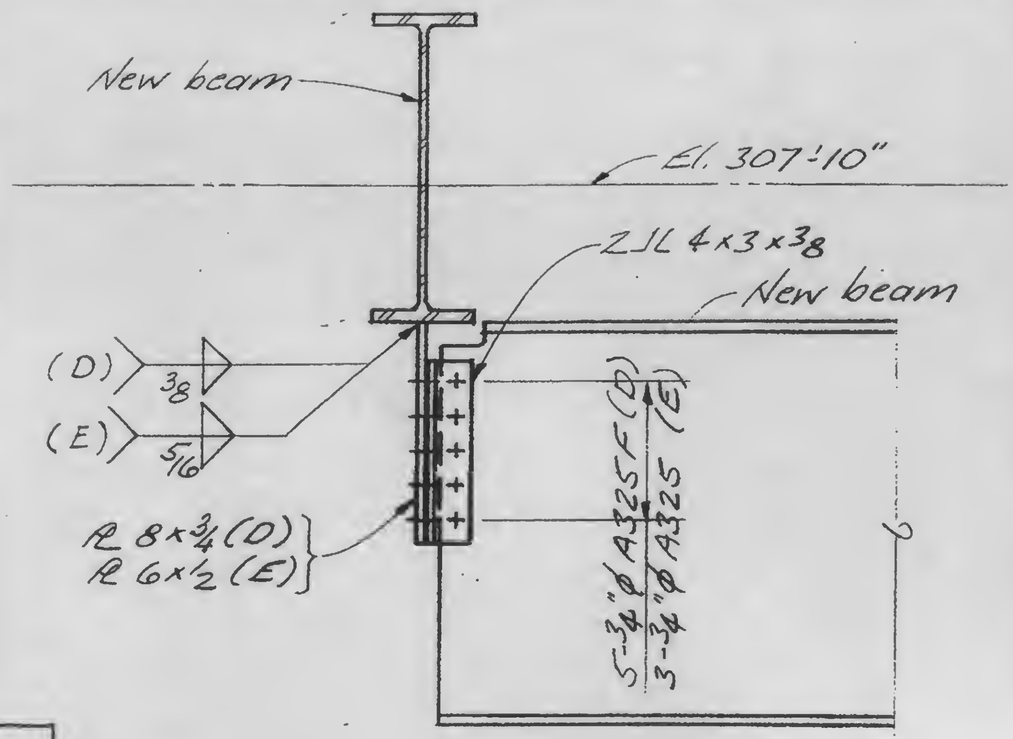

E

13-K11.2-5.1

LICENSED PROFESSIONAL ENGINEER — LESLIE E. ROBERTSON — No. 34360 — UNIVERSITY OF THE STATE OF NEW YORK

DESIGNED KC

DRAWN JA

REVIEWED WAB