SKILLING, HELLE, CHRISTIANSEN, ROBERTSON — Structural & Civil Engineers

PROJECT: THE WORLD TRADE CENTER

TITLE: EL. 303'-6"-ZONE K5-MECH. PLATFORM-CONN. DETAILS

DATE: 5-7-73

REVISIONS

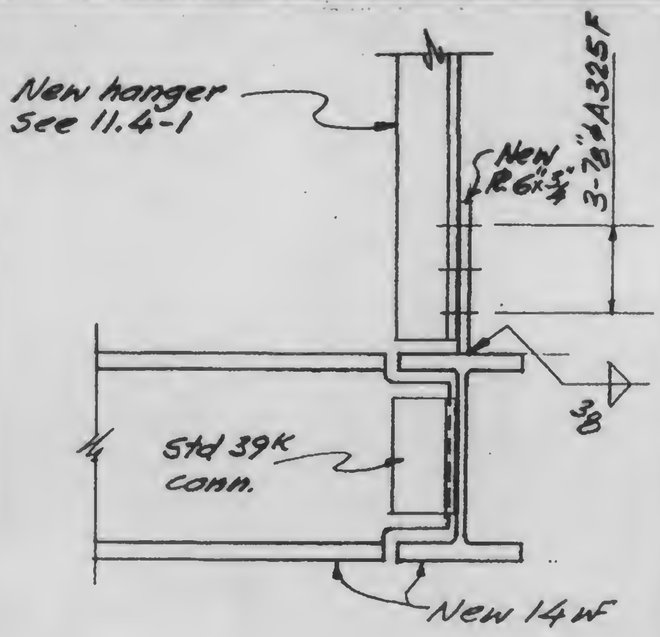

A

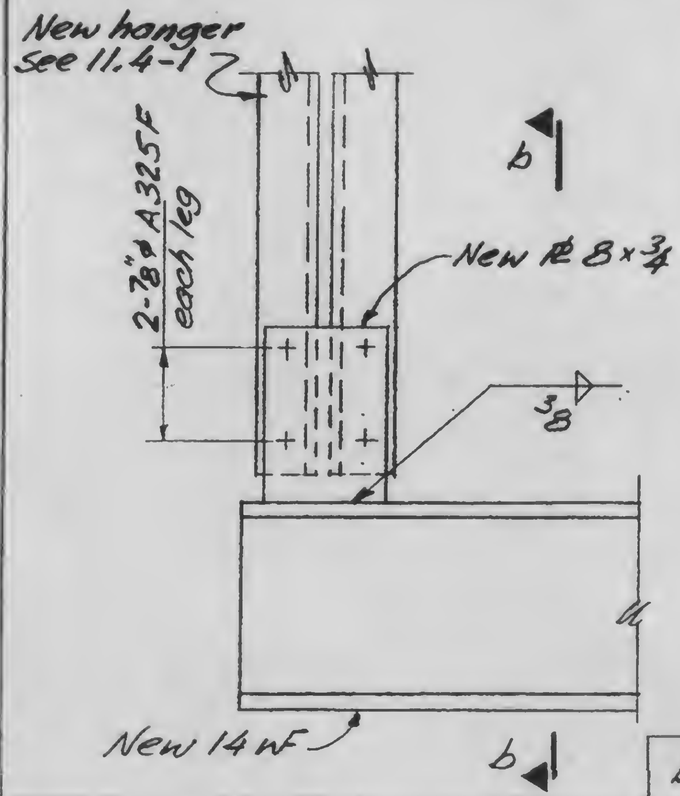

B

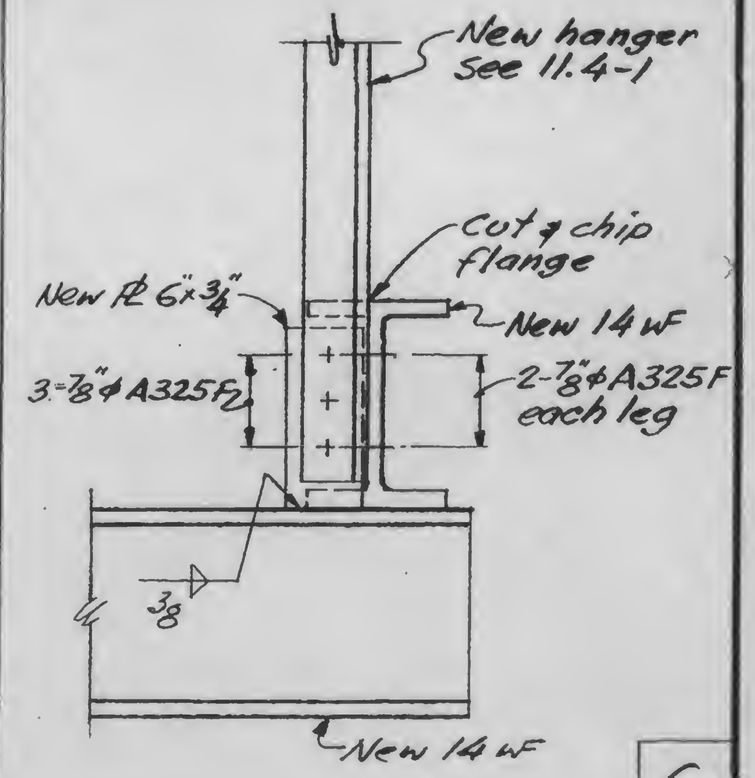

C

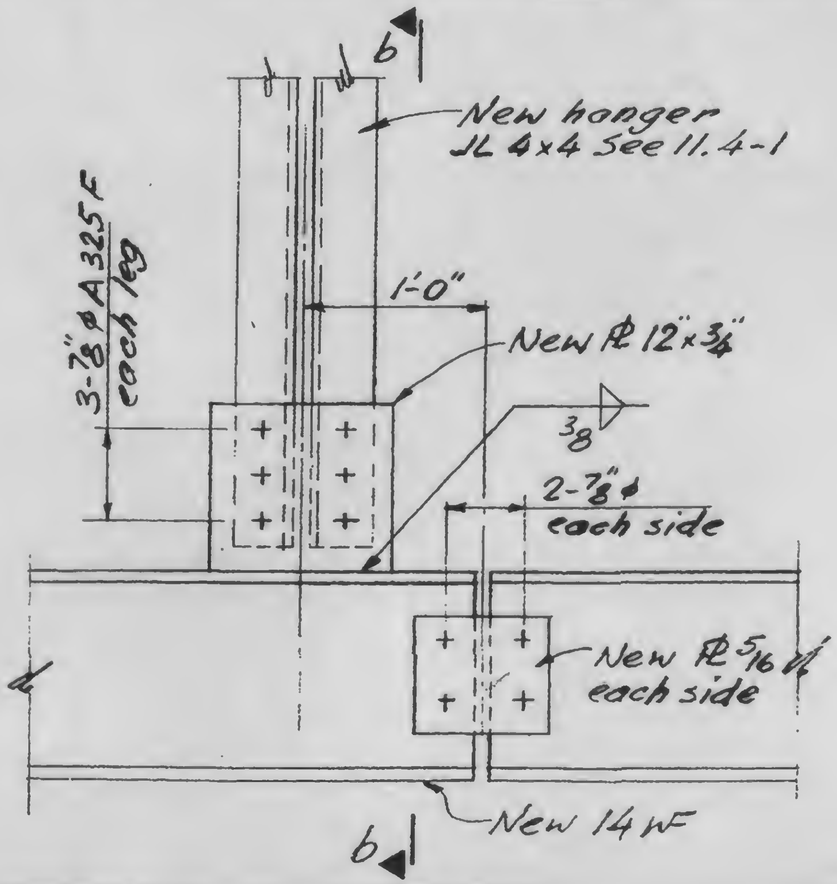

D

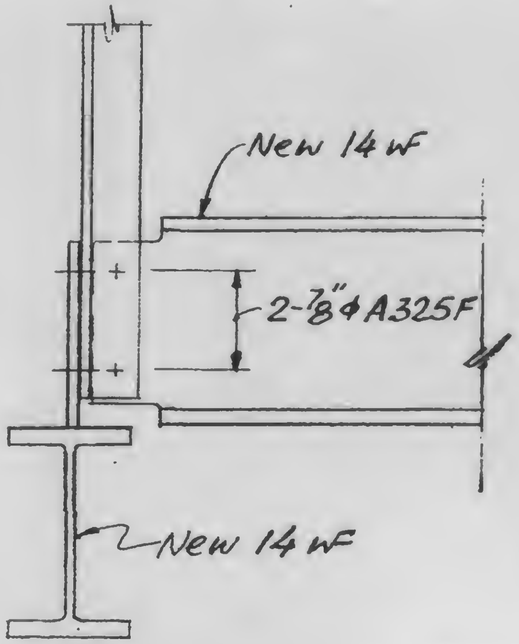

6

13-K11.4-2

LICENSED PROFESSIONAL ENGINEER
LESLIE E. ROBERTSON
No. 34360
UNIVERSITY OF THE STATE OF NEW YORK

DESIGNED

DRAWN John Greaves

REVIEWER DAB