SKILLING, HELLE, CHRISTIANSEN, ROBERTSON — Structural & Civil Engineers

PROJECT: THE WORLD TRADE CENTER | TITLE: EL. 303-6 ZONE K5 - MECH. PLATFORM - CONN. DETAILS | DATE: 5-7-73

REVISIONS

6-4-73

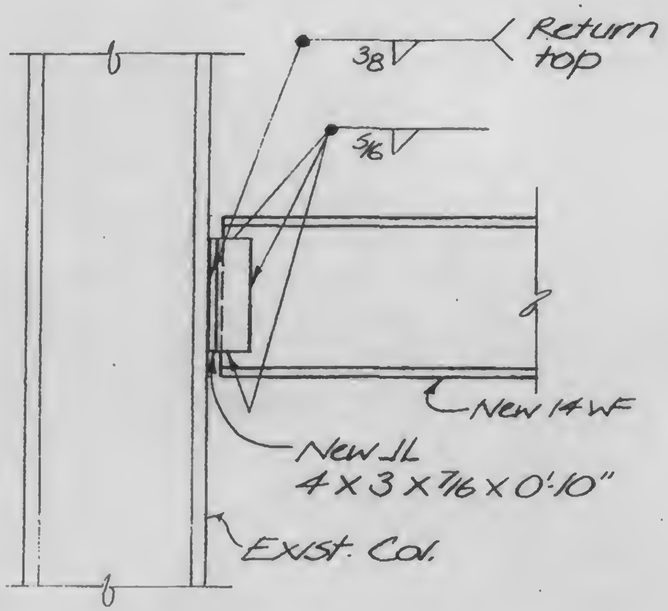

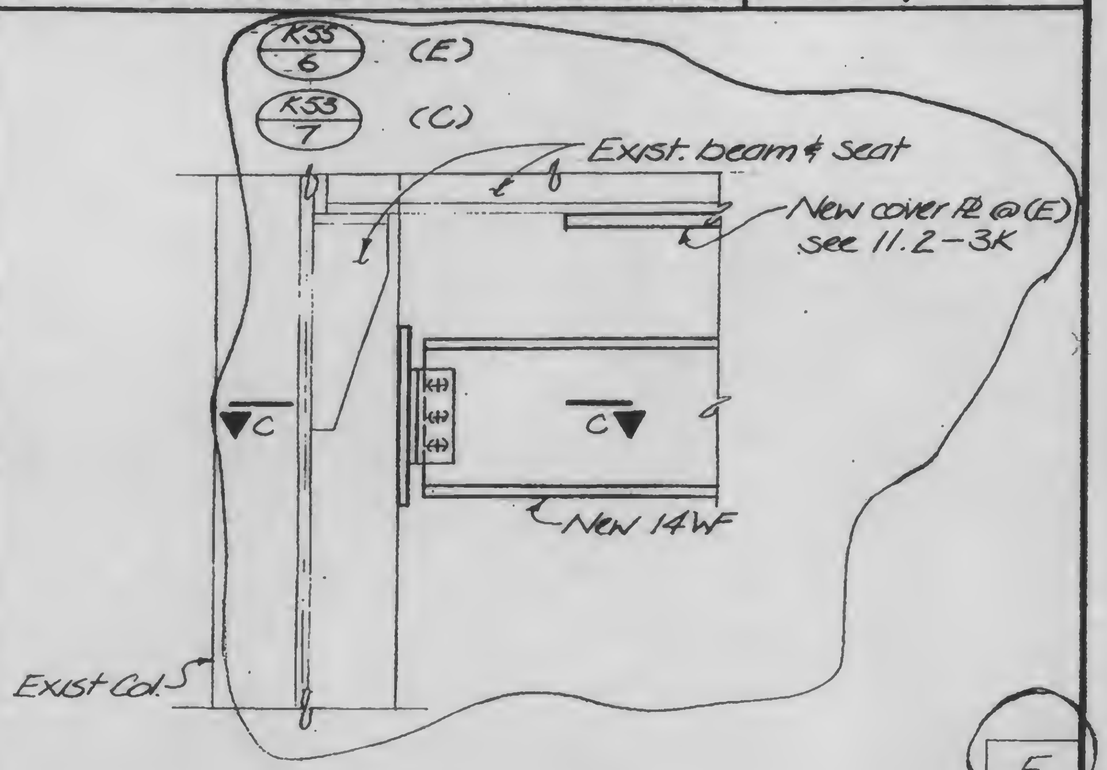

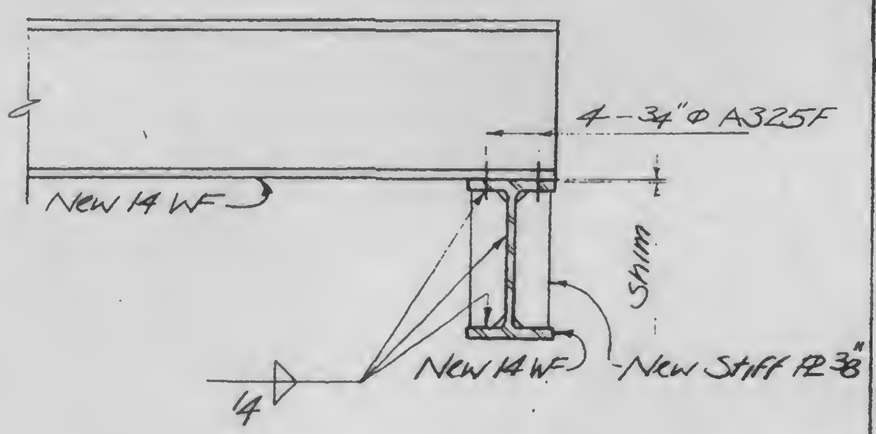

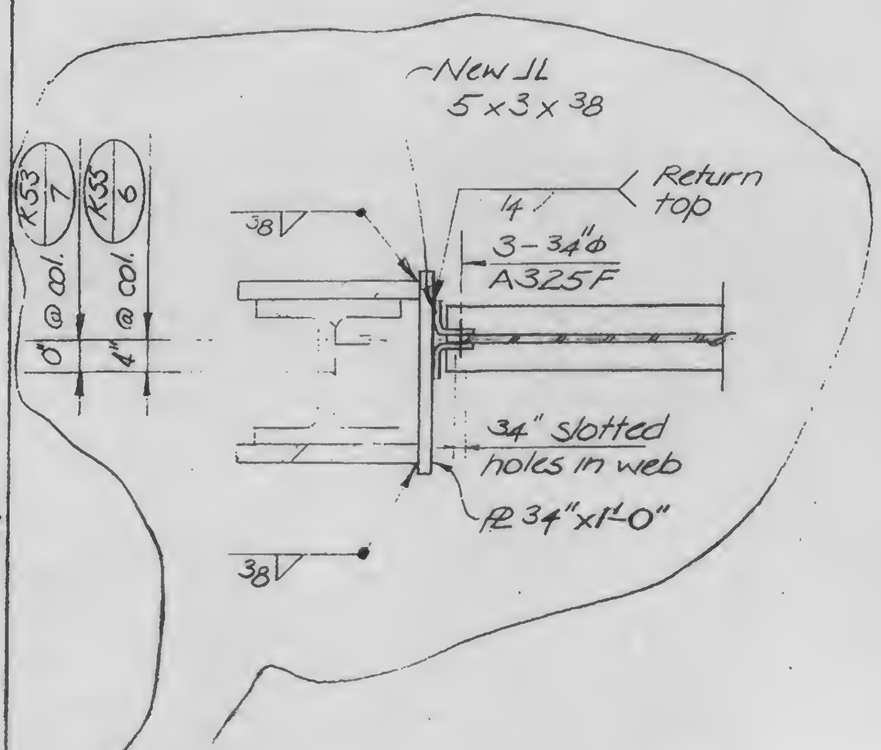

LICENSED PROFESSIONAL ENGINEER — LESLIE E. ROBERTSON — No. 34360 — UNIVERSITY OF THE STATE OF NEW YORK

DESIGNED

DRAWN J. Banks

REVIEWED Wolf

13-K11.4-3