REVISIONS
△2-1-79

SKILLING, HELLE, CHRISTIANSEN, ROBERTSON
CONSULTING STRUCTURAL AND CIVIL ENGINEERS

DRAWING NO. 13-K19 6

PROJECT NTC-1978 HOTEL-SUPPORT REV. | PROJECT NO. 701.283 | BY CAB

DATE 1-3-79

WEB REINFORCING

A Ref. 13-K3.1-1B

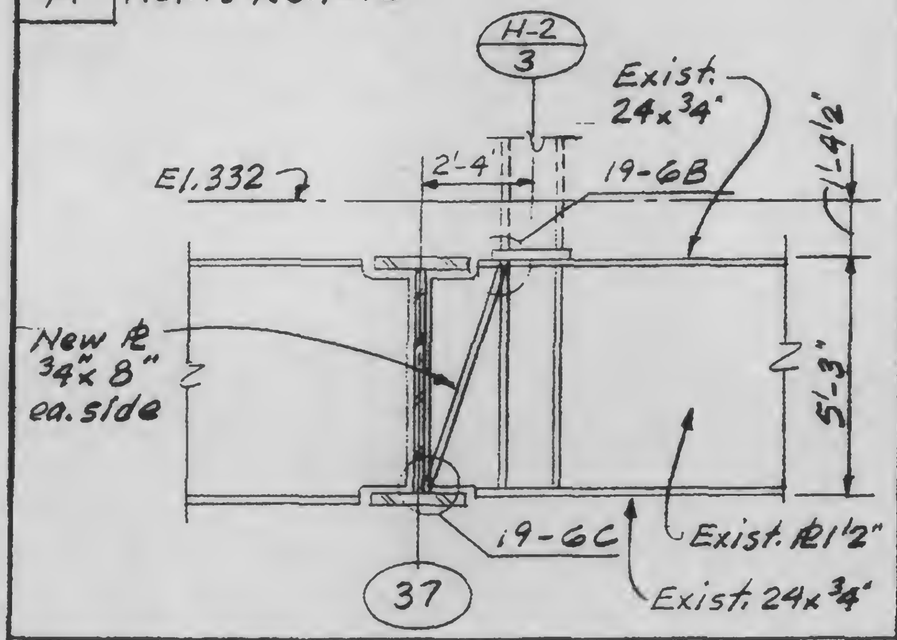

B

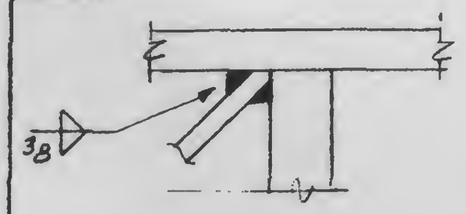

X

C

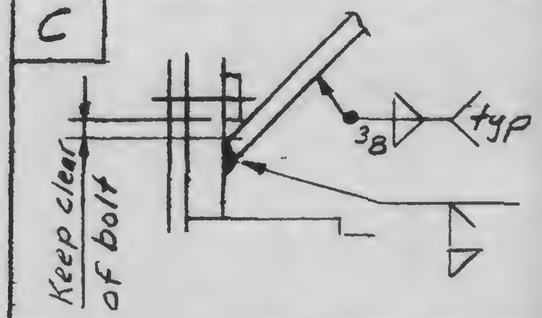

D Ref. 13-K2.1-2

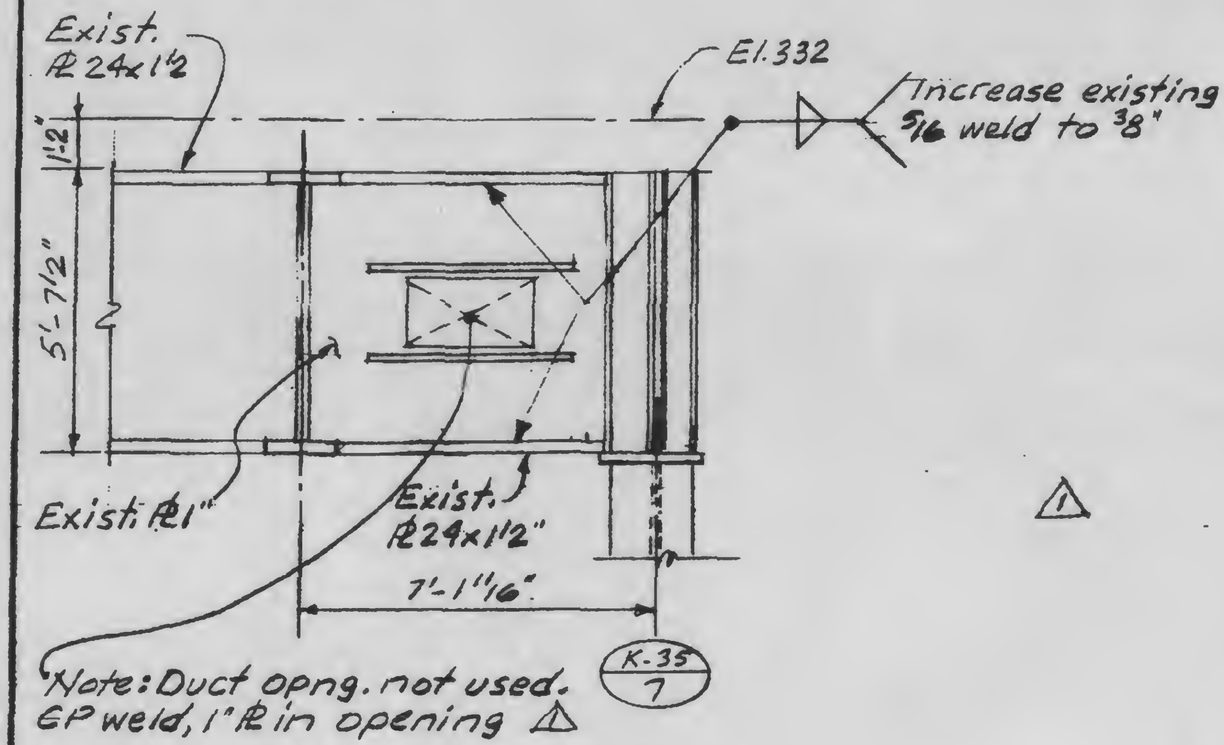

Note: Duct opng. not used. CP weld, 1" PL in opening △1

△1