SKILLING, HELLE, CHRISTIANSEN, ROBERTSON — Structural & Civil Engineers

PROJECT THE WORLD TRADE CENTER | TITLE COLUMN DETAILS | DATE 11-20-72

REVISIONS

RELEASE FOR CONSTRUCTION 11-20-72

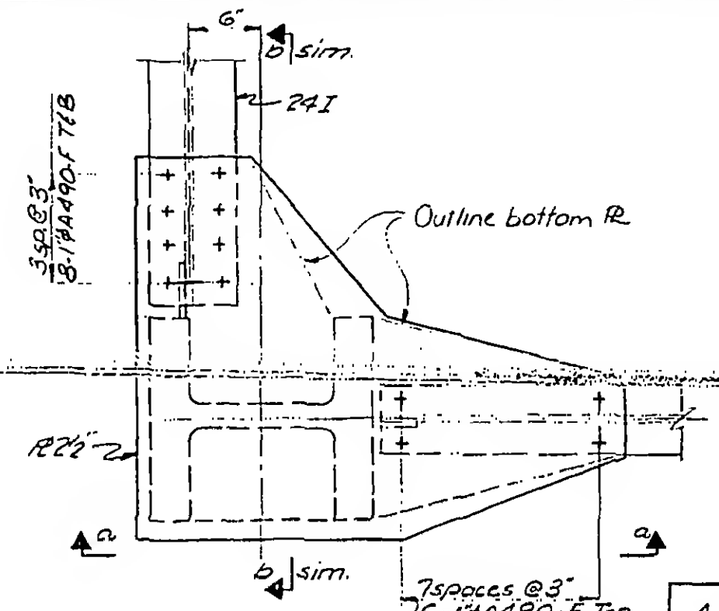


A | a

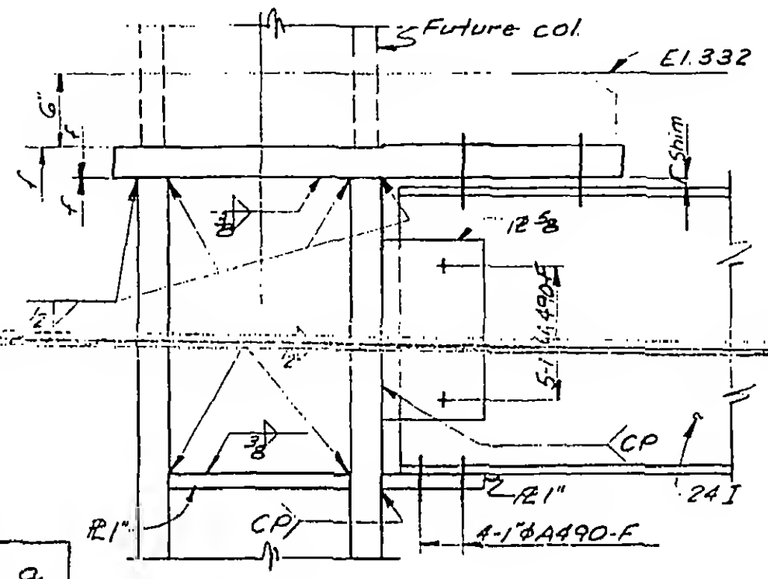


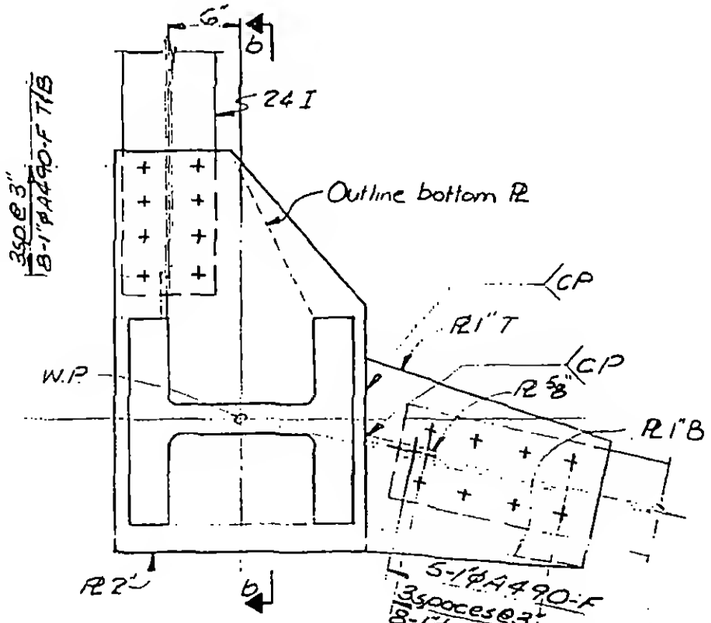


B | b

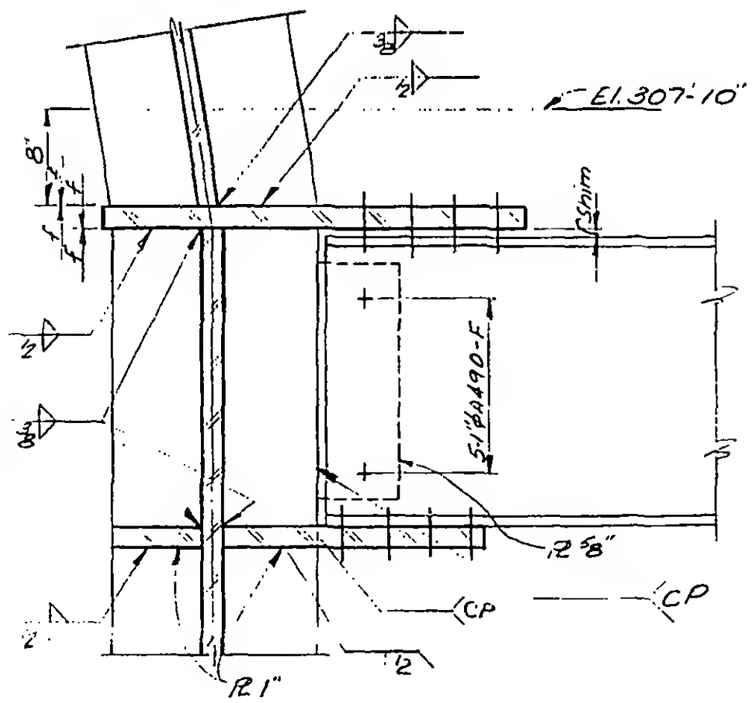


13-K2.2-4

LICENSED PROFESSIONAL ENGINEER
LESLIE E. ROBERTSON
No 34360
UNIVERSITY OF THE STATE OF NEW YORK

DESIGNED

DRAWN TR

REVIEWED