SKILLING, HELLE, CHRISTIANSEN, ROBERTSON — Structural & Civil Engineers

PROJECT	TITLE	DATE
THE WORLD TRADE CENTER	EL. 310 - ZONE K3 - "H" ELEV. - CONN DETAILS	5-7-73

REVISIONS

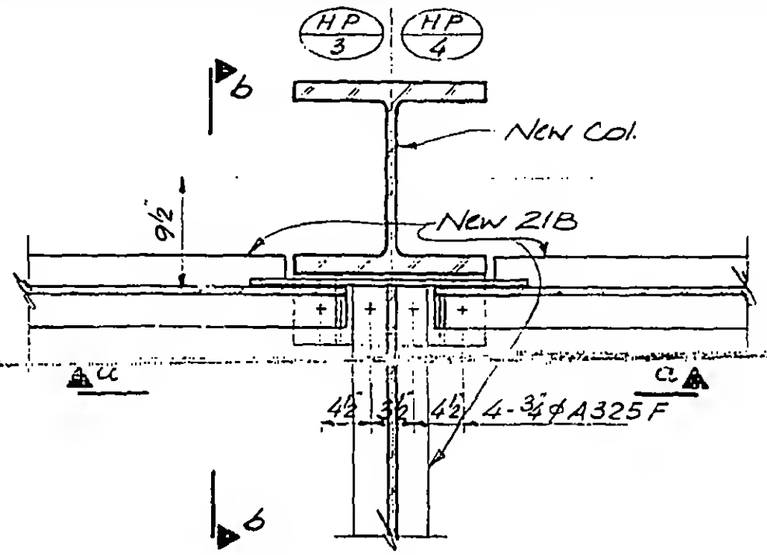

A

a | b

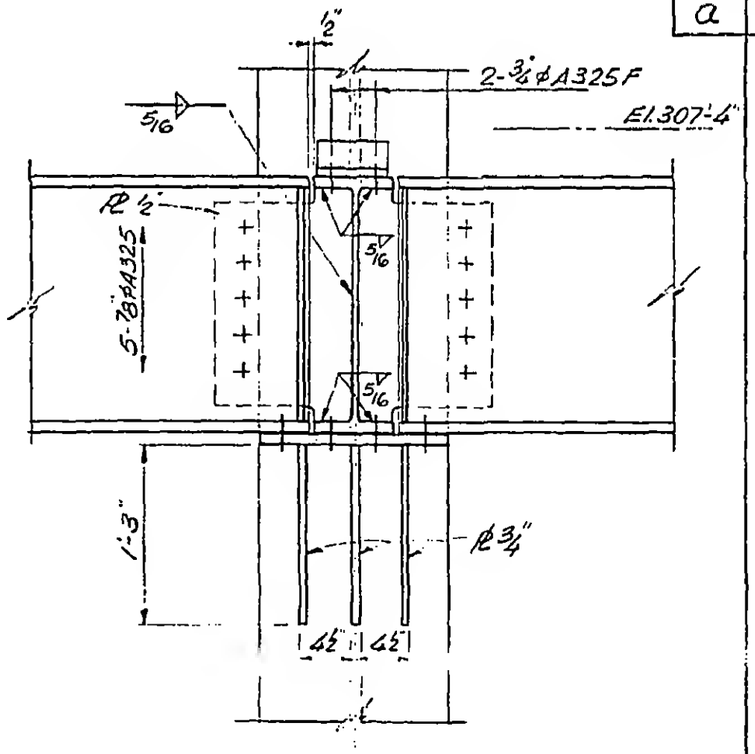

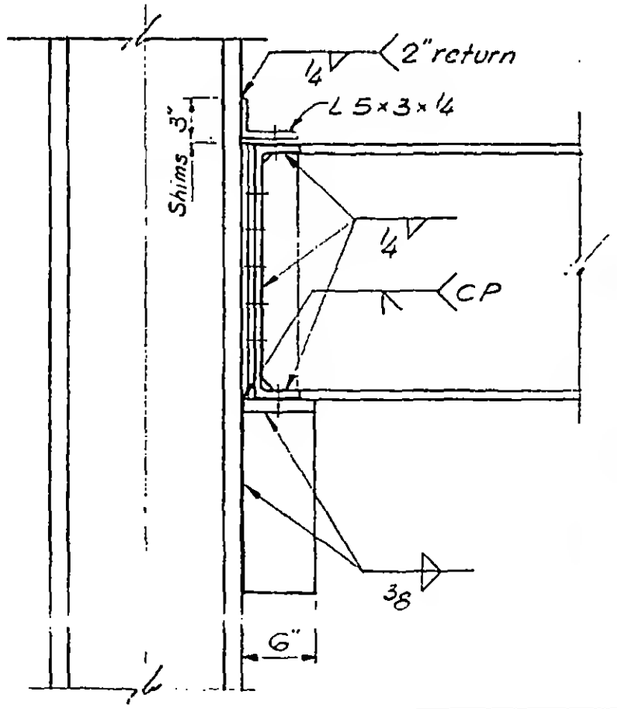

13-K11.1-3.1

LICENSED PROFESSIONAL ENGINEER
LESLIE E. ROBERTSON
No 34360
UNIVERSITY OF THE STATE OF NEW YORK

DESIGNED N. Chiarky
DRAWN John Greening
REVIEWED WOB