SKILLING, HELLE, CHRISTIANSEN, ROBERTSON — Structural & Civil Engineers

PROJECT: THE WORLD TRADE CENTER | TITLE: REVISION AFTER FABRICATION - DETAIL 912 | DATE: 10-7-68

REVISIONS

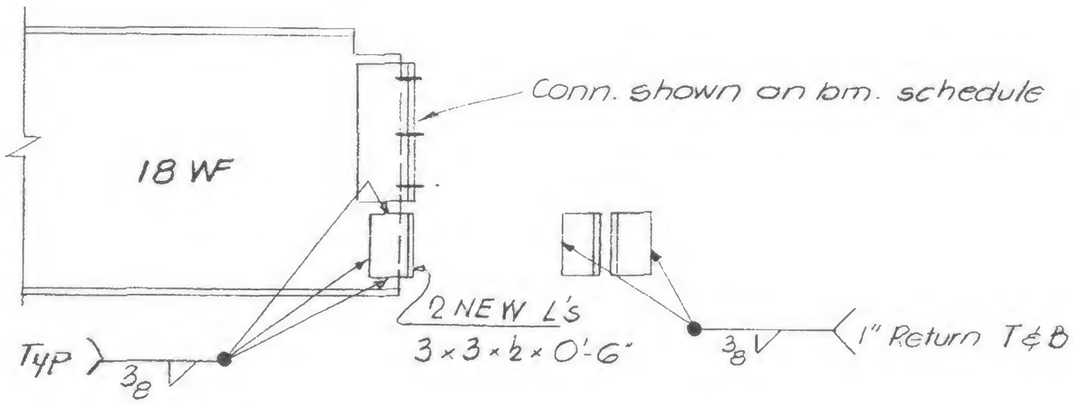

BM. 3988 @ 264'-0" Level

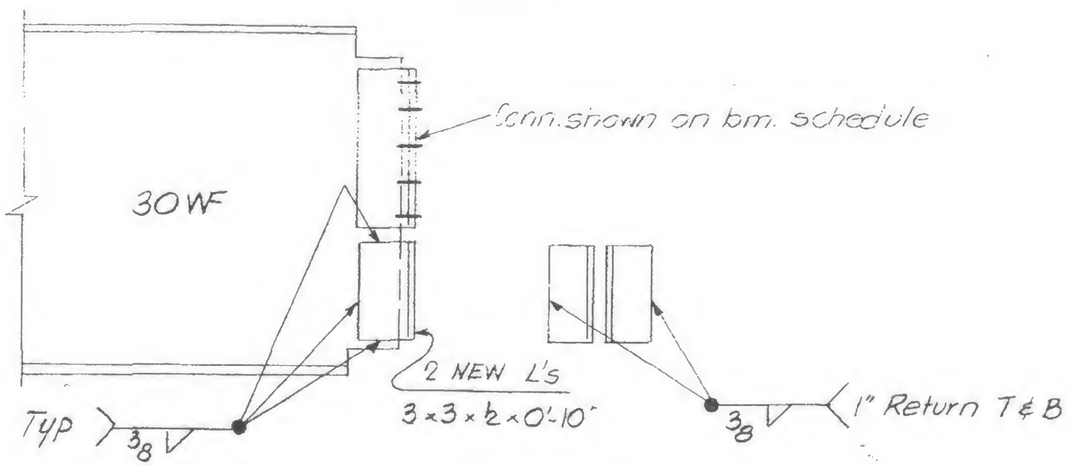

BM. 3915 & 3977 @ 264'-0" level

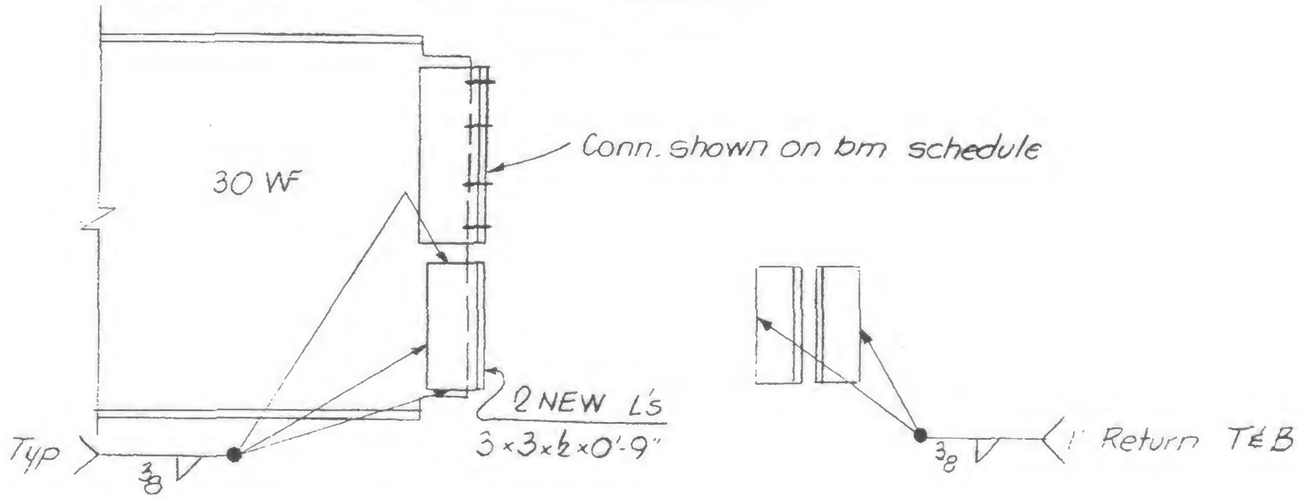

BM. 597 & 3916 @ 284'-0" level

LICENSED PROFESSIONAL ENGINEER
LESLIE E. ROBERTSON
No. 34980
STATE OF NEW YORK

SIGNED

DRAWN

REVIEWED

19-AB-912