SKILLING, HELLE, CHRISTIANSEN, ROBERTSON — Structural & Civil Engineers

PROJECT: THE WORLD TRADE CENTER | TITLE: REVISION AFTER FABRICATION DETAIL 914 | DATE: 11-20-68

REVISIONS

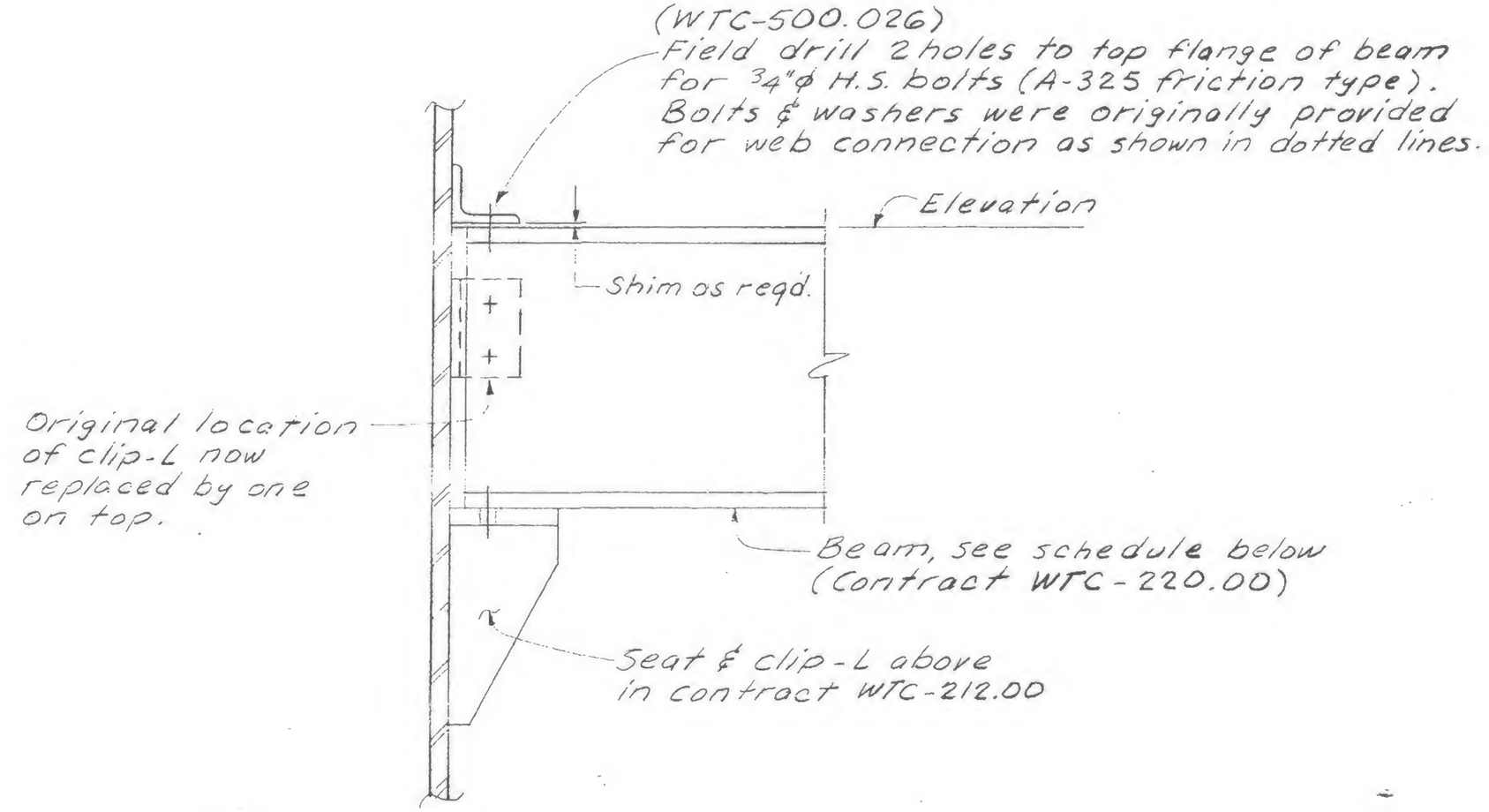

DETAIL NO.	BEAM	
	SIZE	ELEVATION
A-401	18WF55	307'-5"
A-402	24B55	307'-11"
A-403	18WF55	307'-11"
A-404	18WF55	307'-11"
A-405	18WF55	308'-1"
A-406	18WF55	308'-1"
A-407	18WF55	308'-3"

DESIGNED

DRAWN

REVIEWED

19-A-914