SKILLING, HELLE, CHRISTIANSEN, ROBERTSON — Structural & Civil Engineers

PROJECT: THE WORLD TRADE CENTER | TITLE: REVISION AFTER FABRICATION - DETAIL 916 | DATE: 12-30-68

REVISIONS

1-3-69

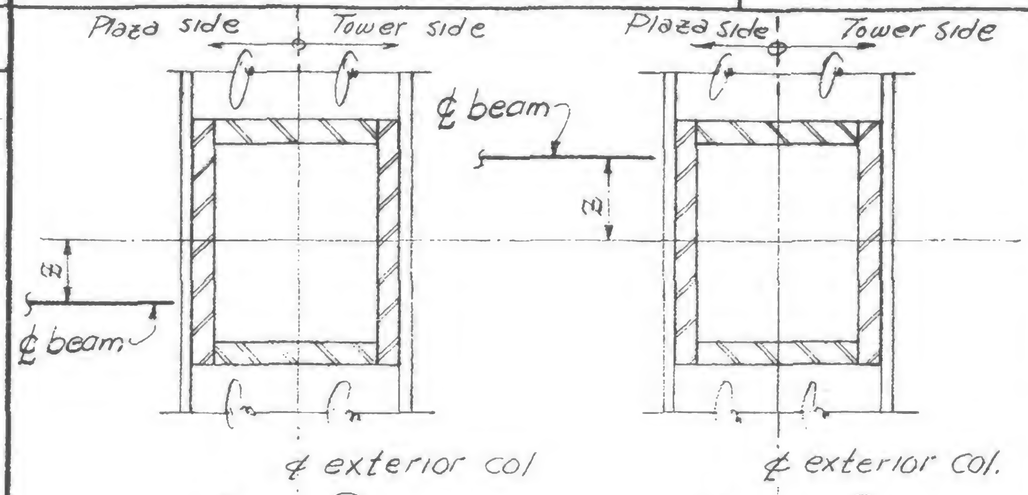

PLAN: PLAZA BEAM SEAT LOCATIONS

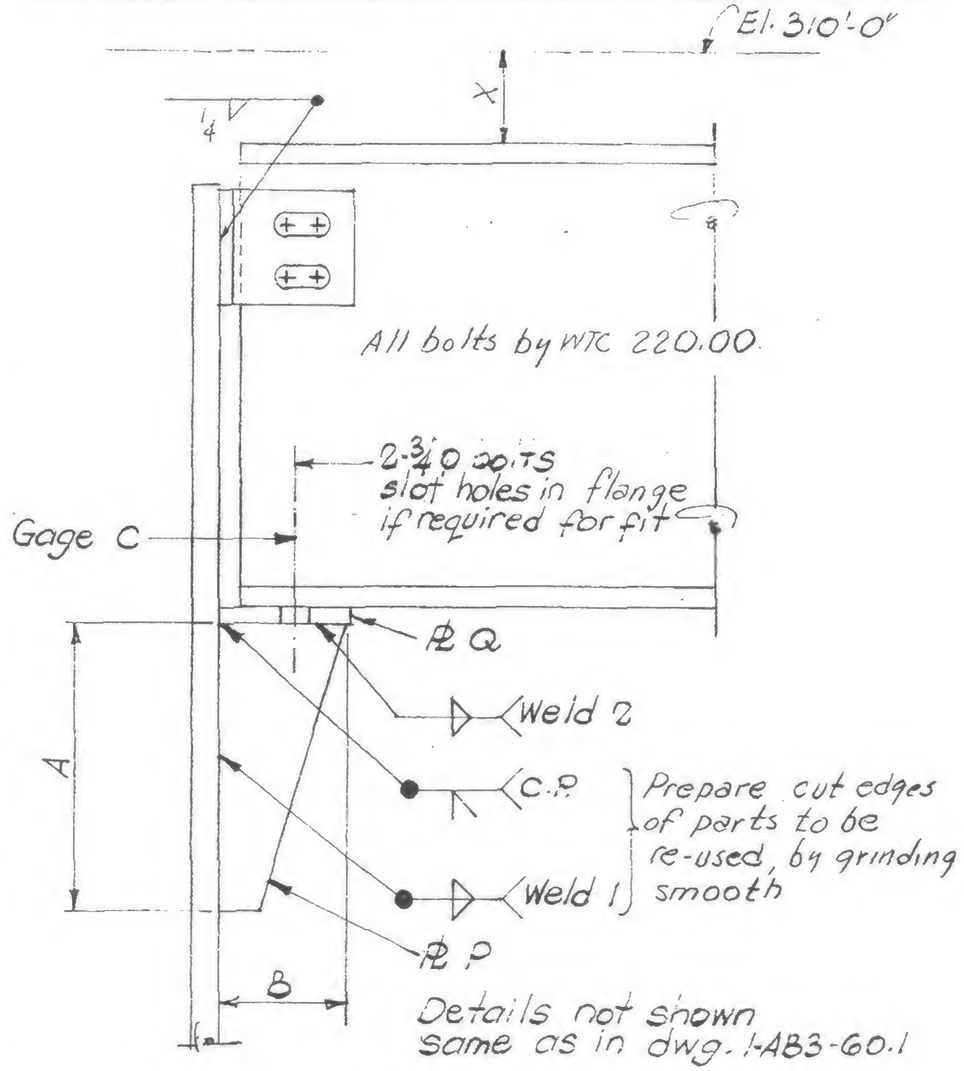

TYPICAL PLAZA BEAM SEAT DETAILS

COLUMN LOCATION							
		224B	301B	312B	315B	351B	354B
Action Required		Note 1	Note 2	Note 2	Note 2	Note 1	Note 3
Previous Detail		P.I.N	P10B	P.I.A	P.I.A	None	None
New Seat Location	Type	①	②	①	②	on ℄	on ℄
	Z	0'-6"	0'-6"	2'-6"	1'-3"	0"	0"
Seat Design Data		—	Note 4	Note 4	Note 4	Note 5	Note 4
Plates	P	¾"				½"	
	Q	¾"				½"	
Dimensions	A	1'-2"				1'-0"	
	B	6"				6"	
	X	11"				11"	
	C	5½"				3½"	
Welds	1	⅜"				5/16	
	2	⅜"				5/16	
Beam Size		16WF58				16WF36	
Ref. Dwg: 1-AB3-60.1, -60.5							

NOTES:

1. Provide new beam seat
2. Remove beam seat & web clip from loc. previously shown and install removed parts at new location shown.
3. Remove seat & clip previously scheduled for column 224B and install removed parts at col 354B
4. Seat details are the same as previously scheduled for this column. See reference dwg.
5. Seat detail is the same as previously scheduled under P.I.N.
6. Dress spandrel face after cutting off bm seats & web clips, by filling gouges with weld metal & for grinding burrs smooth.
7. New bm seats & clips may be installed in lieu of re-using exist'g parts, ℄ Contr's option.

19-B-916

LICENSED PROFESSIONAL ENGINEER — LESLIE E. ROBERTSON — No. 34360 — UNIVERSITY OF THE STATE OF NEW YORK

DESIGNED

DRAWN S.T.M.

REVIEWED