SKILLING, HELLE, CHRISTIANSEN, ROBERTSON — Structural & Civil Engineers

PROJECT: THE WORLD TRADE CENTER | TITLE: REVISIONS TO STRUCTURAL STEEL DETAIL 920 | DATE: 1-17-69

REVISIONS

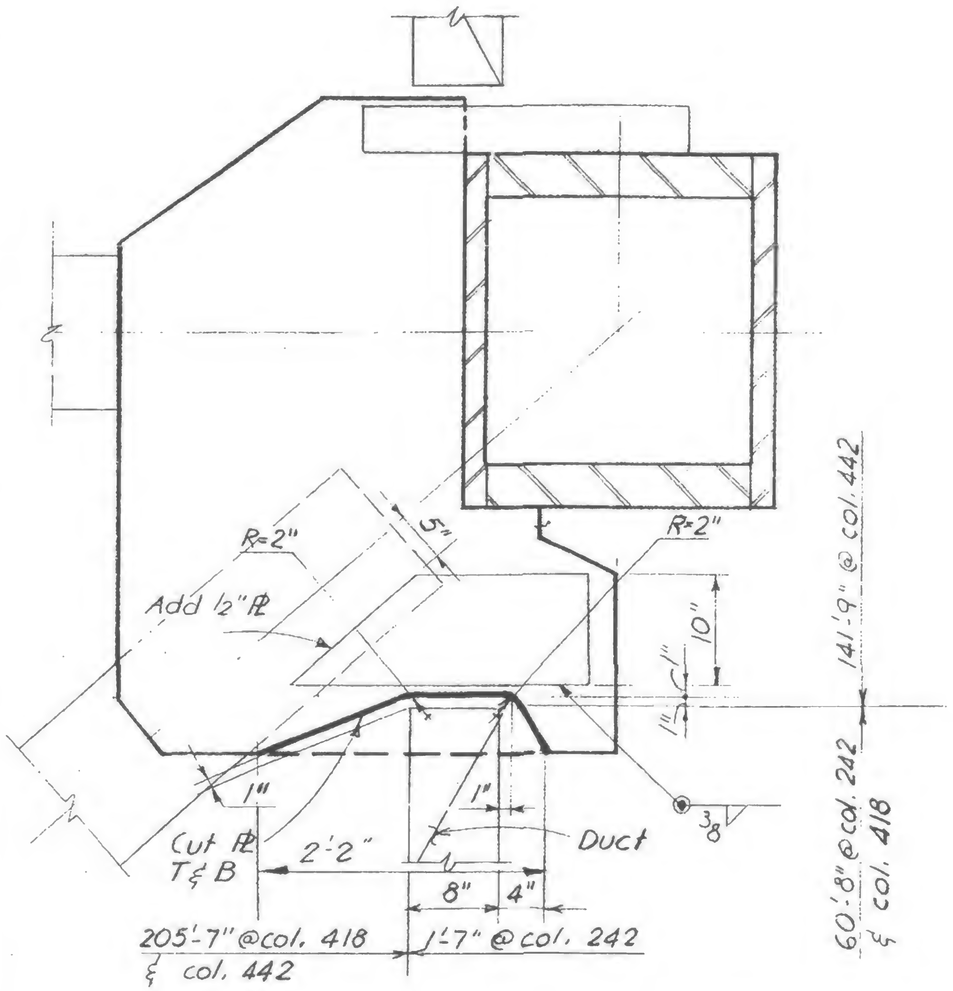

Details are typical for top & bottom gusset PLs.

DETAIL 65 - Exterior cols. 242 & 442
DETAIL 65A (Opp. hand) - Exterior column 418

Floor 2

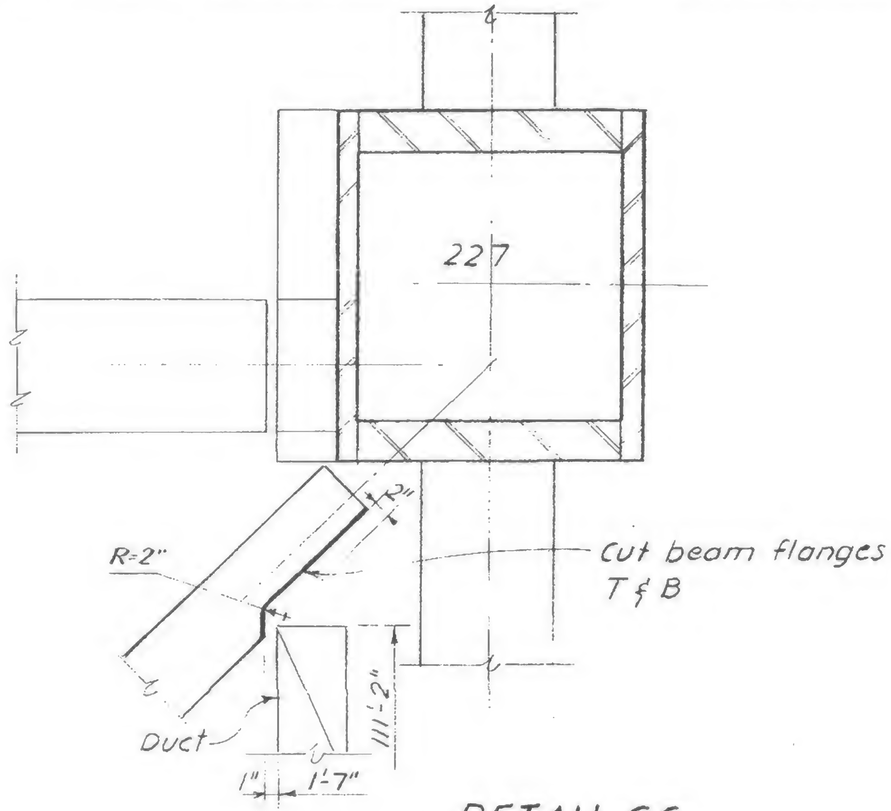

DETAIL 66
Floor 2

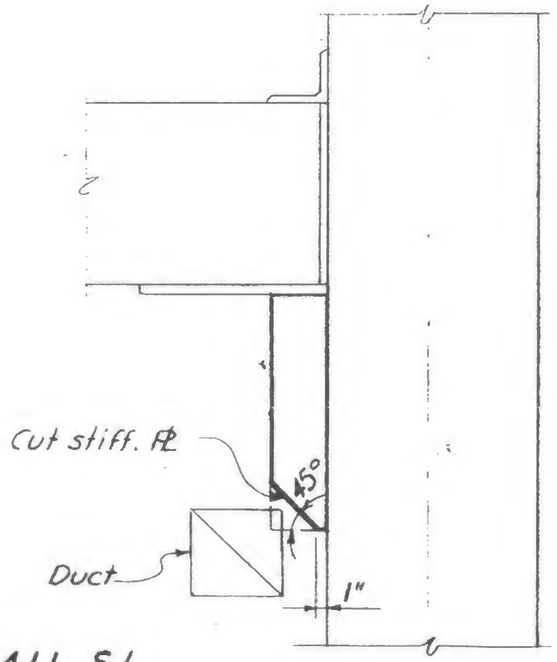

DETAIL 51
Floor 2

Elevation

At exterior cols. 109, 151, 304 & 351

LICENSED PROFESSIONAL ENGINEER
LESLIE E. ROBERTSON
No. 34360
UNIVERSITY OF THE STATE OF NEW YORK

DESIGNED

DRAWN

REVIEWED

19-AB-920