SKILLING, HELLE, CHRISTIANSEN, ROBERTSON — Structural & Civil Engineers

PROJECT THE WORLD TRADE CENTER | TITLE CONCRETE HOIST LEAD SHEAVE SUPPORTS | DATE 5-12-69

REVISIONS
5-21-69
8-11-69

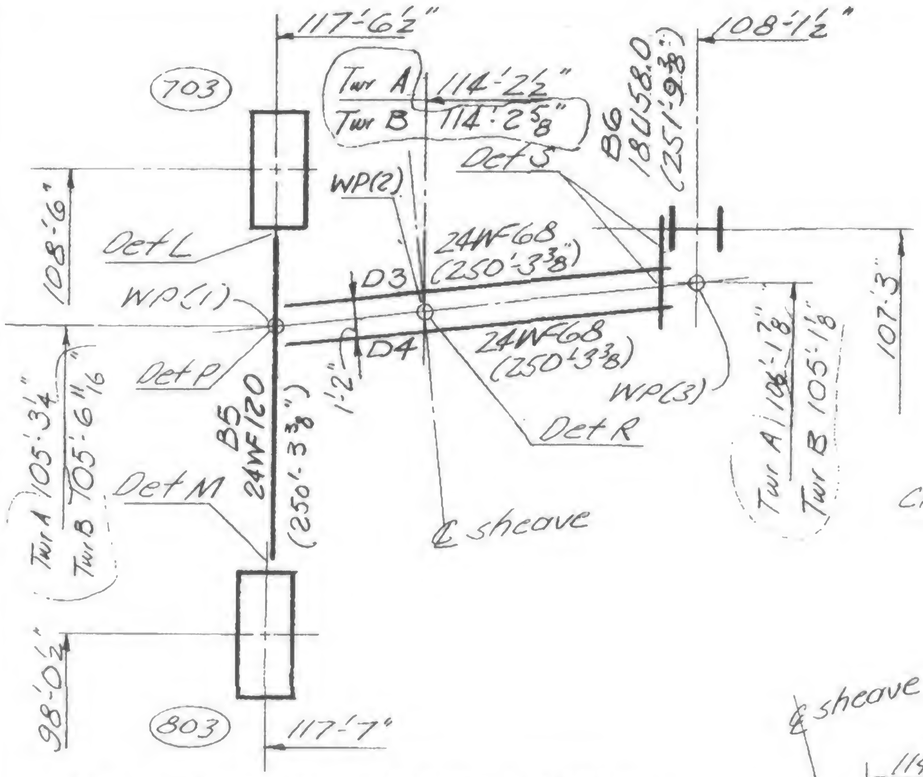

PLAN - LEAD SHEAVE FRAMING

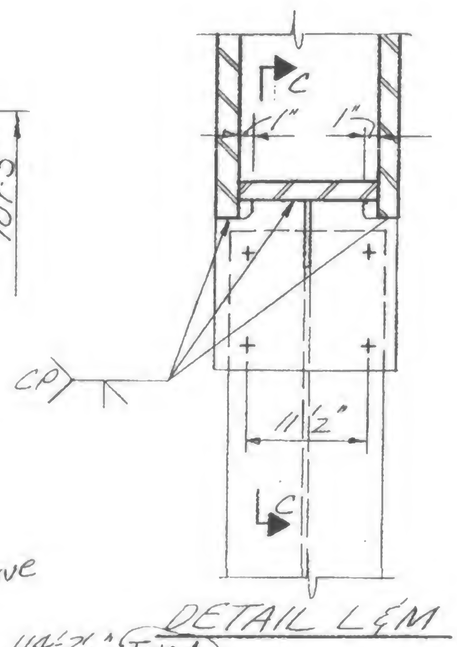

DETAIL L&M

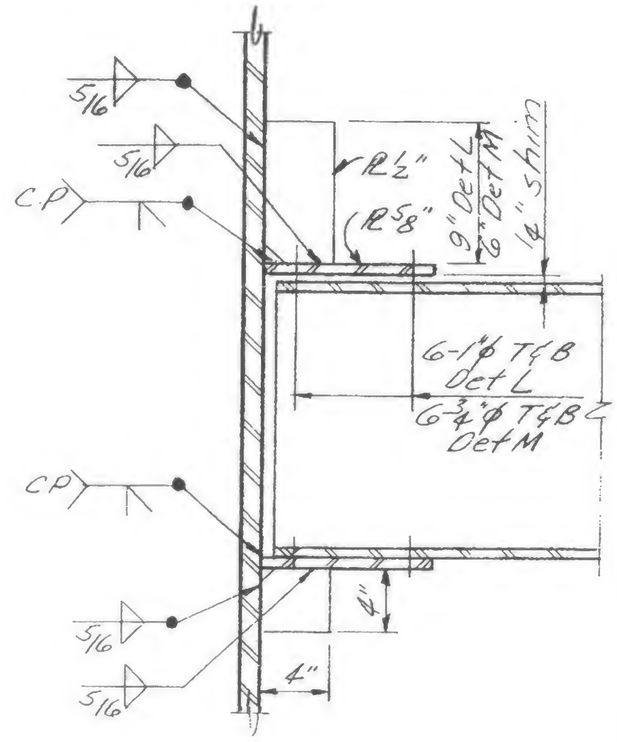

Section C-C

Det typical for each sheave beam

DETAIL P

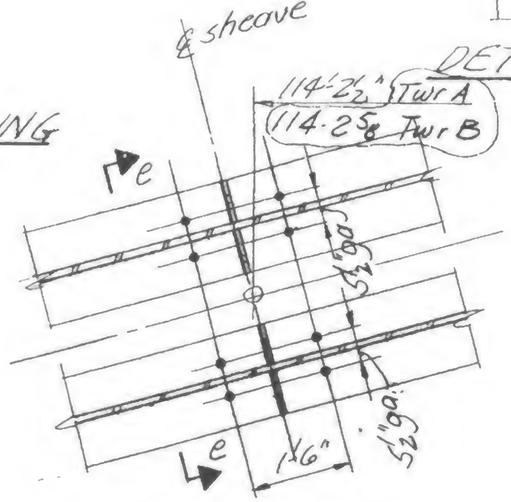

DETAIL R

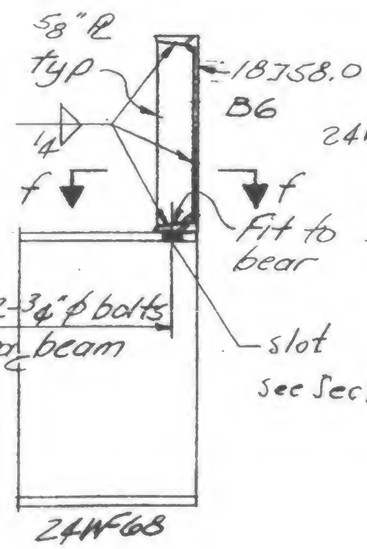

DETAIL S

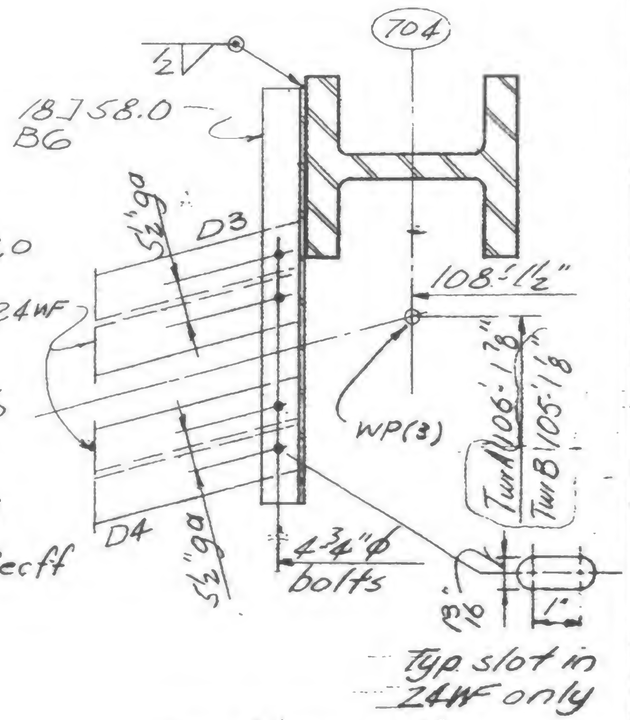

Section f-f

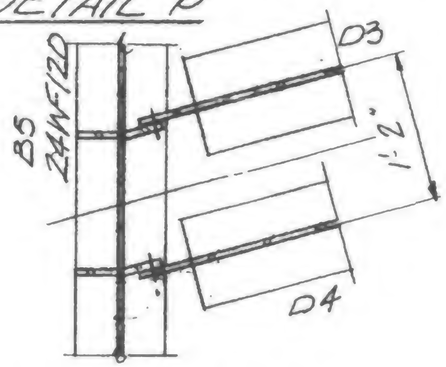

Section d-d

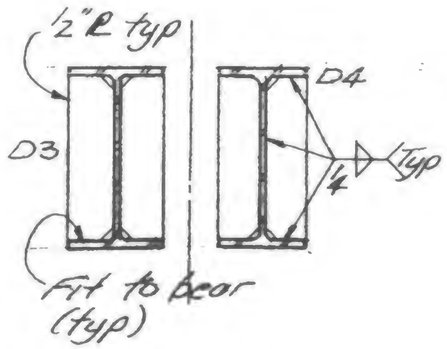

Section e-e

LICENSED PROFESSIONAL ENGINEER
LESLIE E. ROBERTSON
No. 34360
UNIVERSITY OF THE STATE OF NEW YORK

DESIGNED
DRAWN
REVIEWED

19-AB-956