REVISIONS
10/5/79 ⚠4
10/15/79 ⚠3
1/30/79 ⚠2
1/30/80 ⚠1

SKILLING, HELLE, CHRISTIANSEN, ROBERTSON — Structural & Civil Engineers

PROJECT THE WORLD TRADE CENTER | TITLE DUMBWAITER PIT SUPPORT - FLOOR 106 | DATE 5-9-79

WTC##.00####.01

A

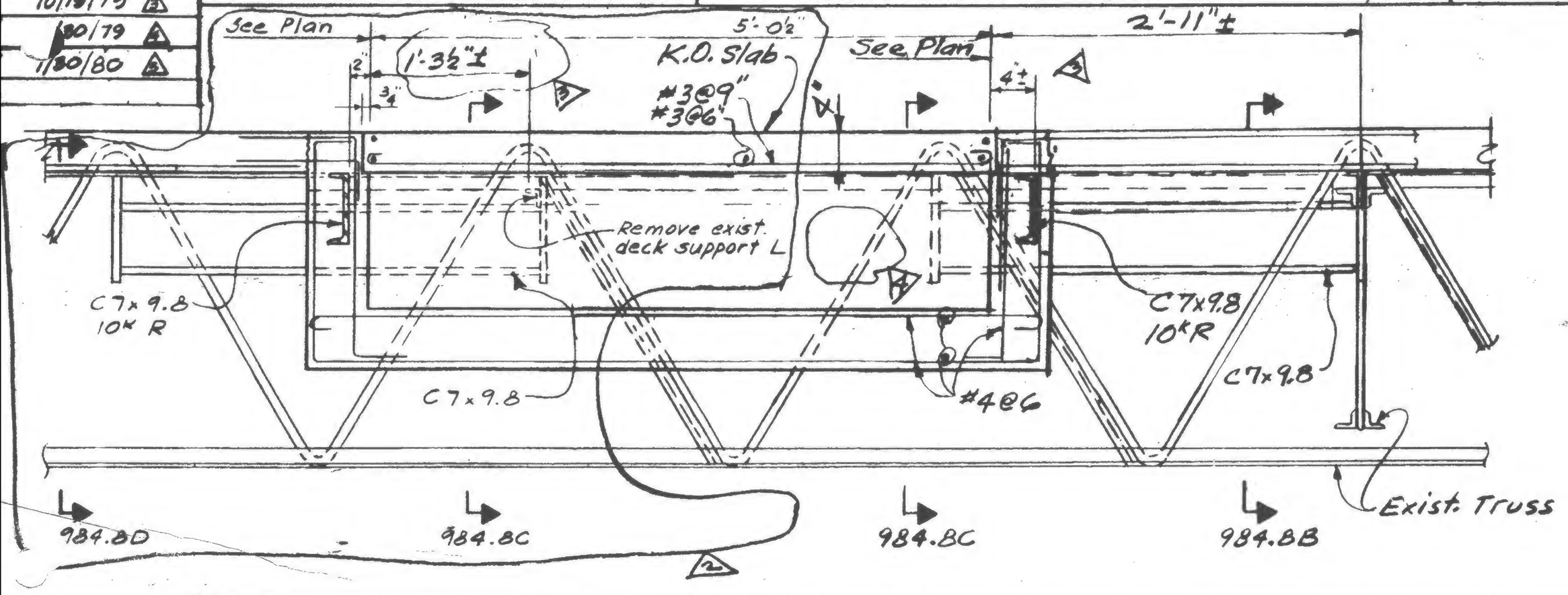

B

D

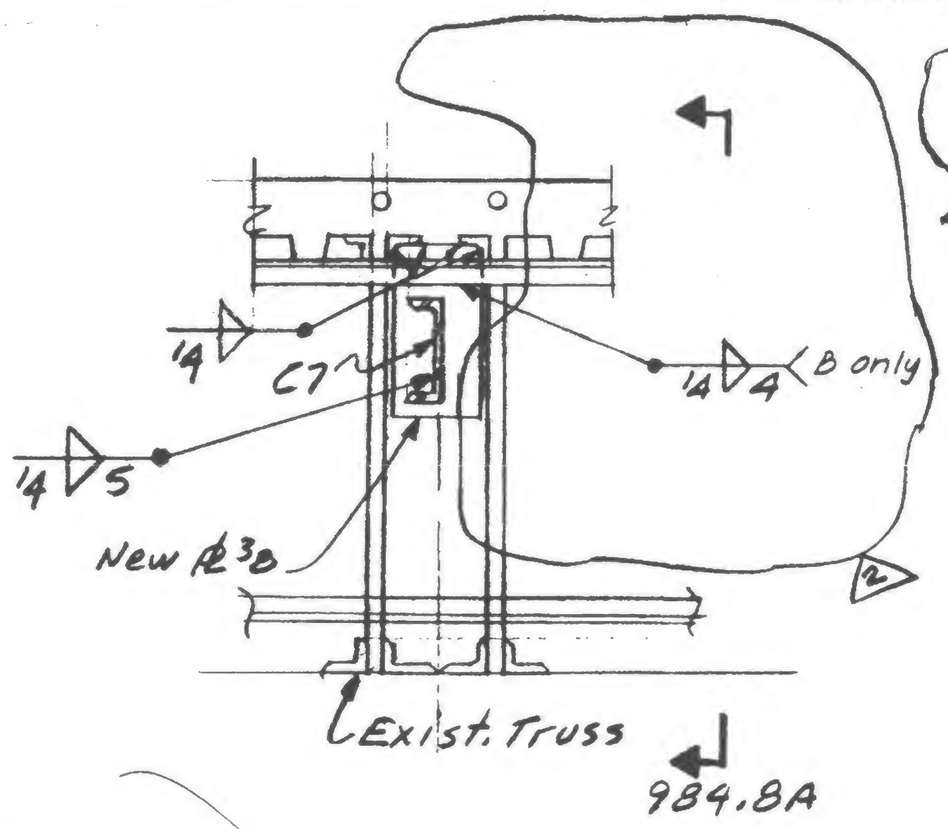

C

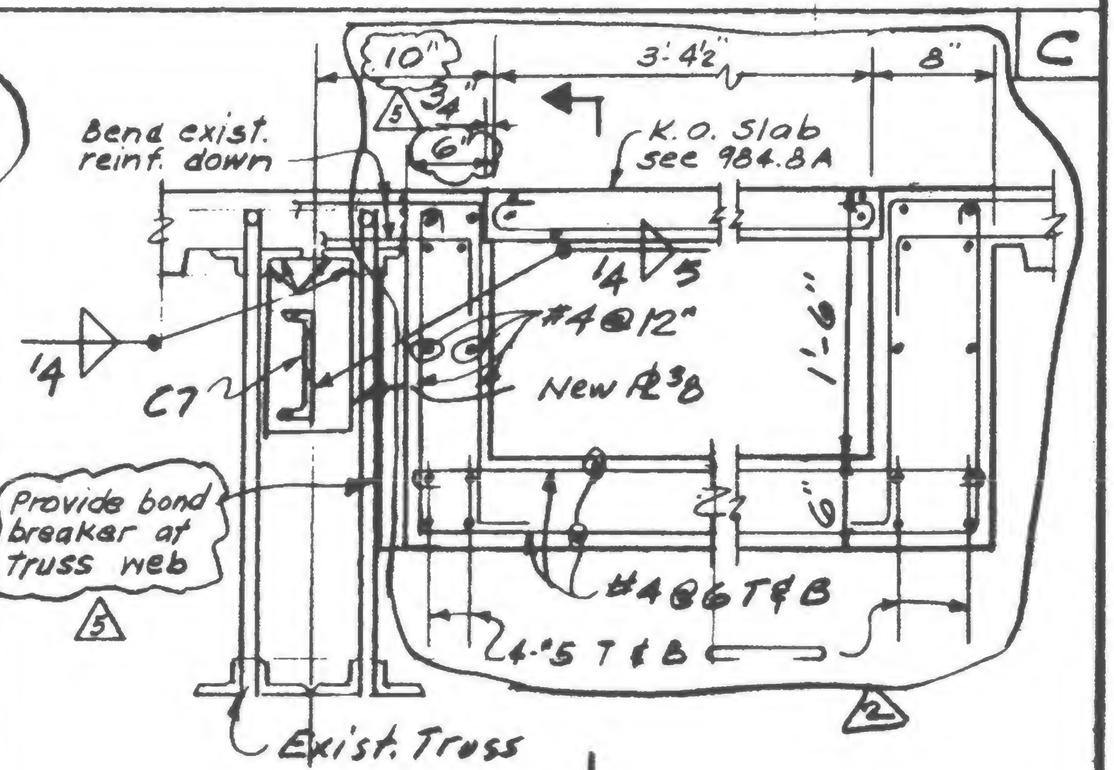

LICENSED PROFESSIONAL ENGINEER
LESLIE E. ROBERTSON
No. 34340
UNIVERSITY OF THE STATE OF NEW YORK

DNED

DRAWN

REVIEWED LER

19-A-984.8