SKILLING HELLE CHRISTIANSEN ROBERTSON — Structural & Civil Engineers

PROJECT: THE WORLD TRADE CENTER | TITLE: TRUSS DETAILS - FL 106 | DATE: 1-7-71

DIVISIONS

11/21/71
7/30/71
10/6/71
5/9/79

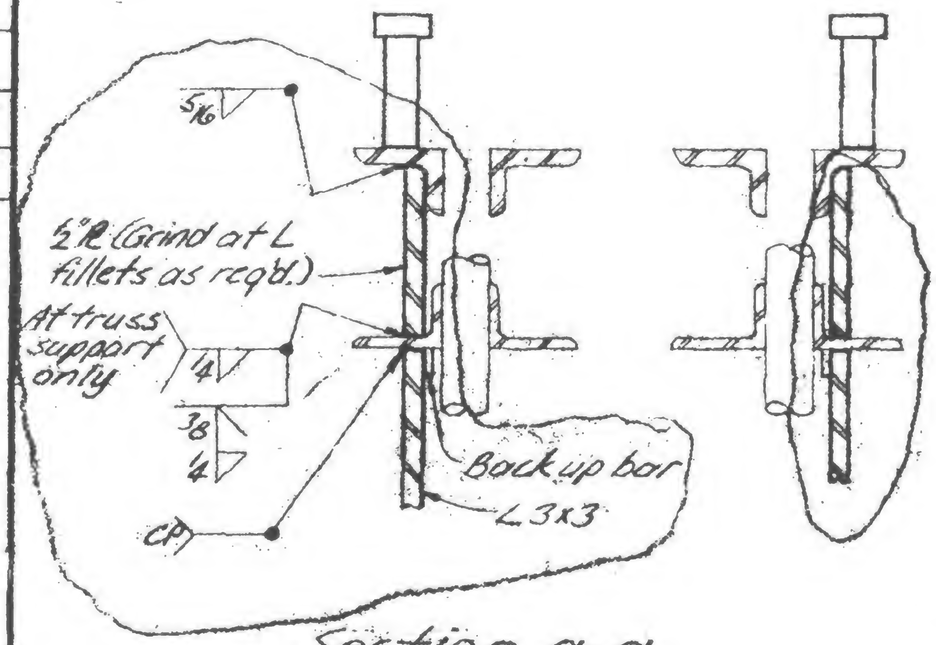

Section a-a

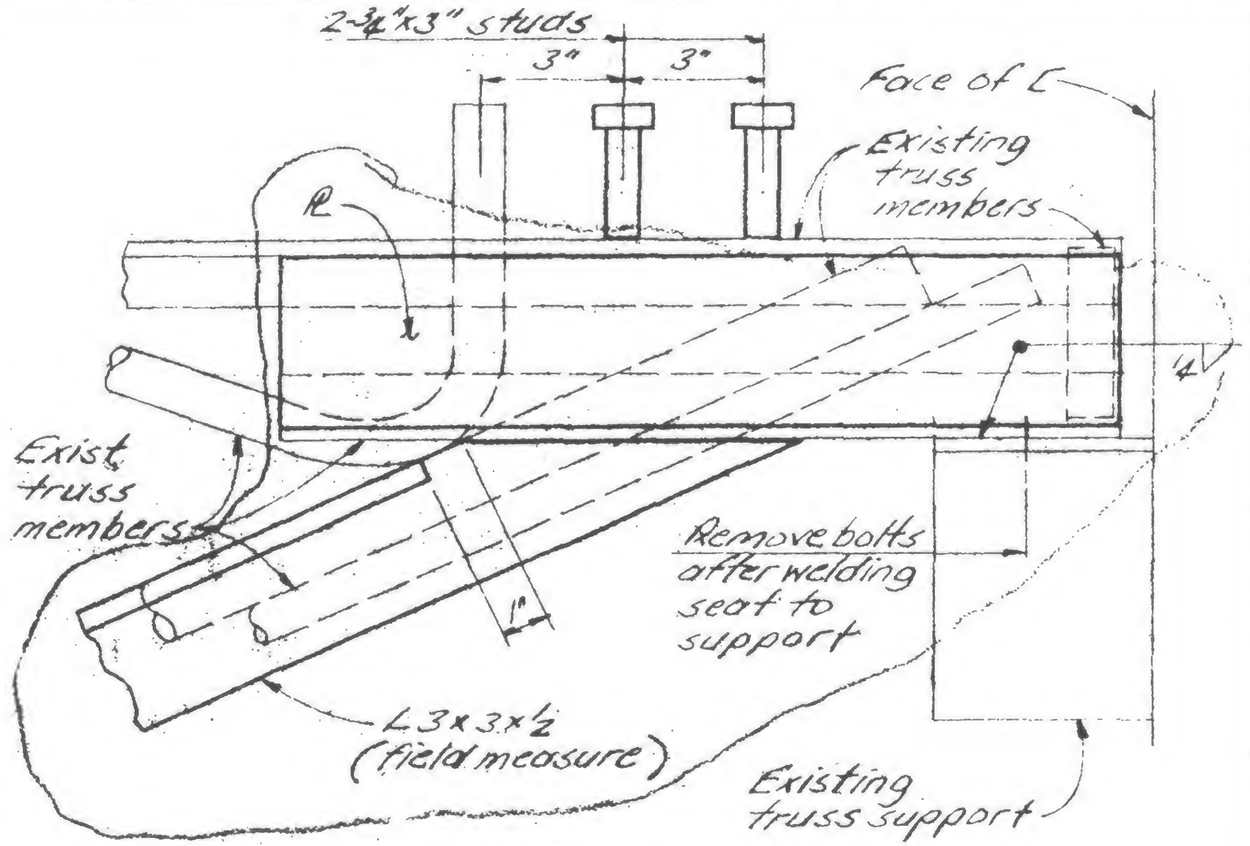

Detail 985G

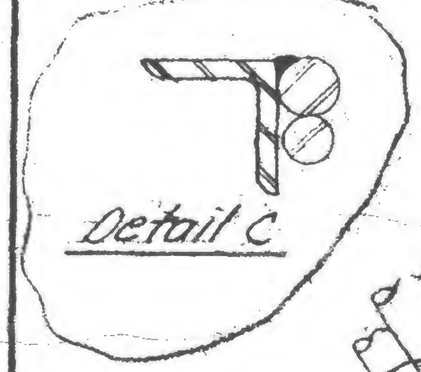

Detail C

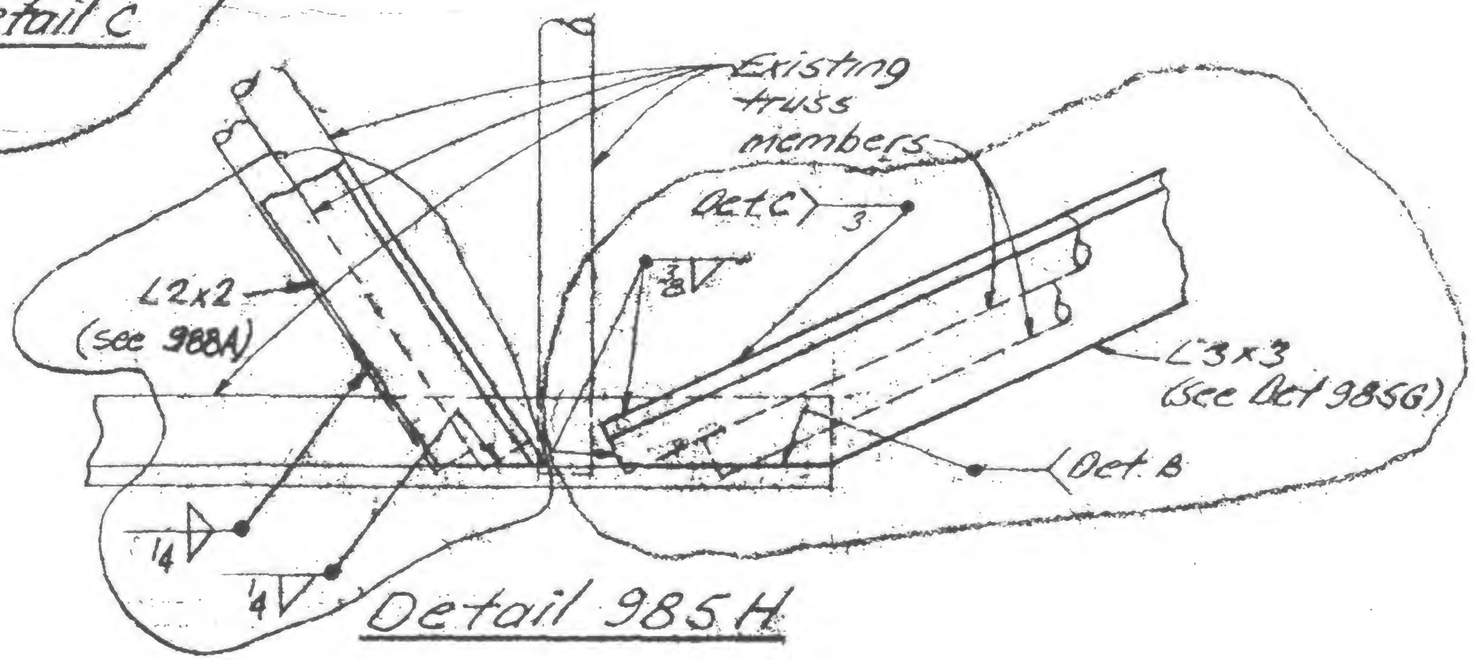

Detail 985H

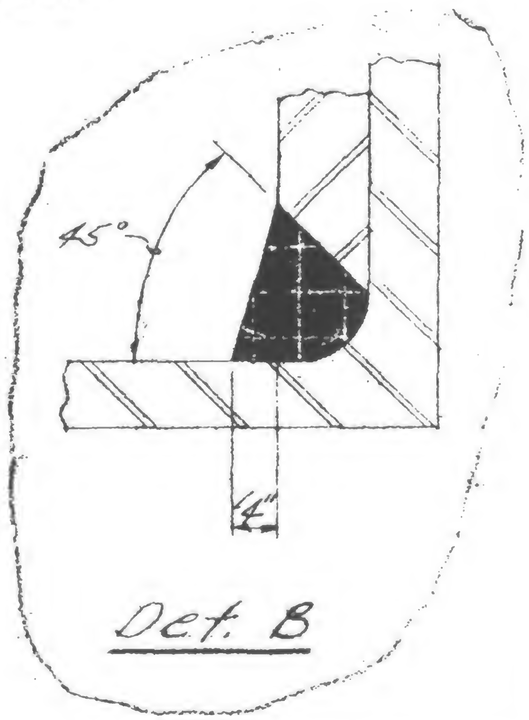

Det. B

LESLIE E. ROBERTSON — LICENSED PROFESSIONAL ENGINEER — No. 34980 — THE STATE OF NEW YORK

DESIGNED

DRAWN

CHECKED

19-A-985.4