SKILLING, HELLE, CHRISTIANSEN, ROBERTSON — Structural & Civil Engineers

PROJECT THE WORLD TRADE CENTER | TITLE TRUSS DETAILS - FL. 106 | DATE 5/9/79

REVISIONS

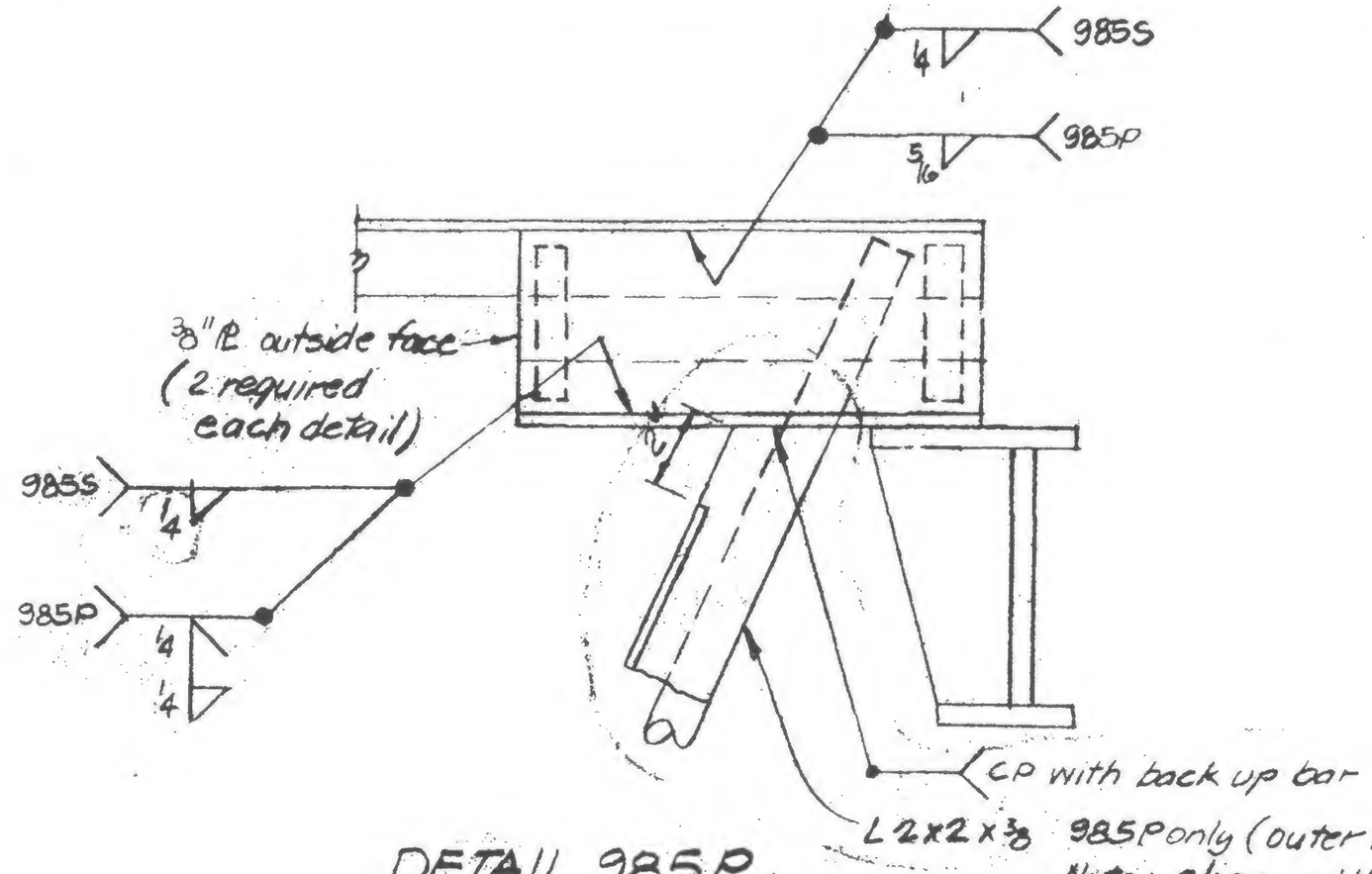

DETAIL 985P
DETAIL 985S as noted



DESIGNED

DRAWN P. Orelu

REVIEWED

19-A-985.8