SKILLING, HELLE, CHRISTIANSEN, ROBERTSON — Structural & Civil Engineers

WTC 444.00

PROJECT THE NORLD TRADE CENTER | TITLE FL. 106 CONNECTION DETAILS | DATE 5/9/79 R

11-30-79 4

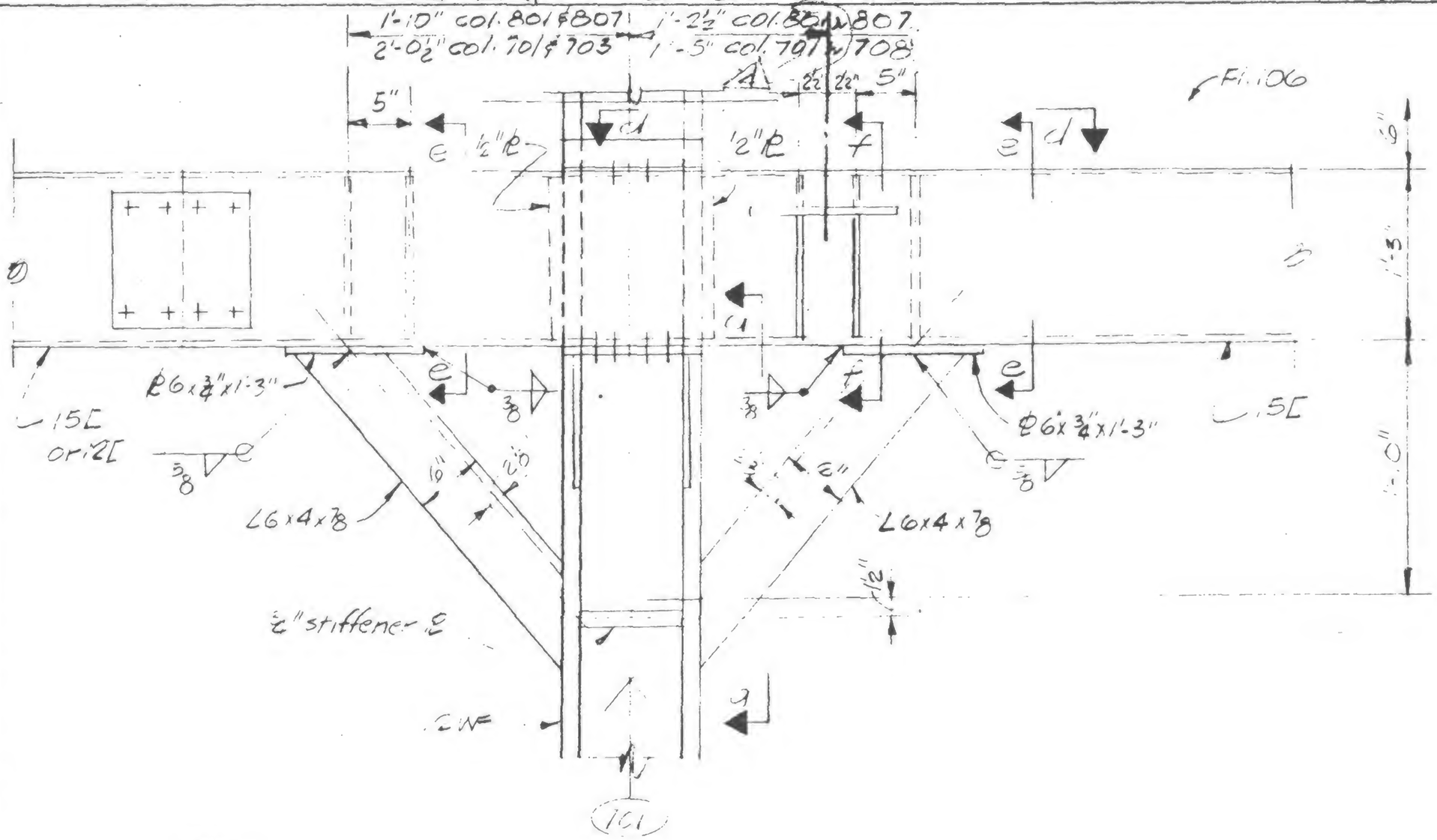

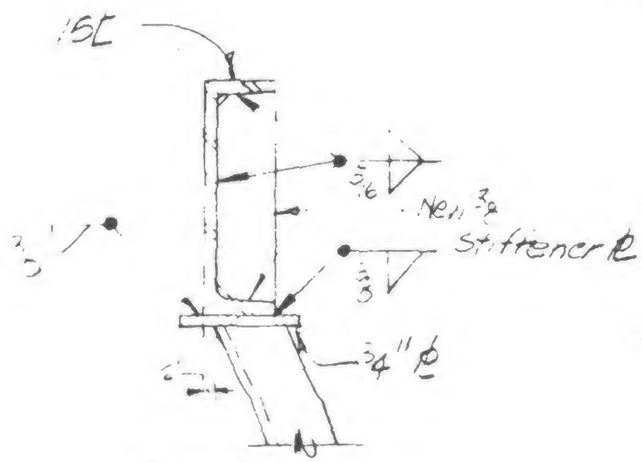

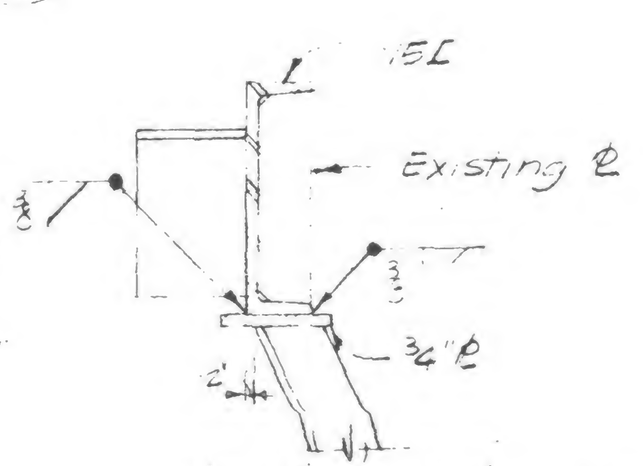

Notes

1. All additional detail material to be Fy=50 ksi.
2. All welding electrodes to be E70xx

Reinf. not required col. 701

DETAIL 987E Col. 701 & 708 New

DETAIL 987F Col. 801 & 807 New

19-A-9875

REGISTERED PROFESSIONAL ENGINEER LESLIE E. ROBERTSON No 34360 CITY OF THE STATE OF NEW YORK

DESIGNED

DRAWN

REVIEWED LCR