SKILLING, HELLE, CHRISTIANSEN, ROBERTSON — Structural & Civil Engineers

PROJECT THE WORLD TRADE CENTER | TITLE TRUSS DETAILS - FLOOR 106 | DATE 1/27/71

REVISIONS

7/30/71

Printed 5/9/79

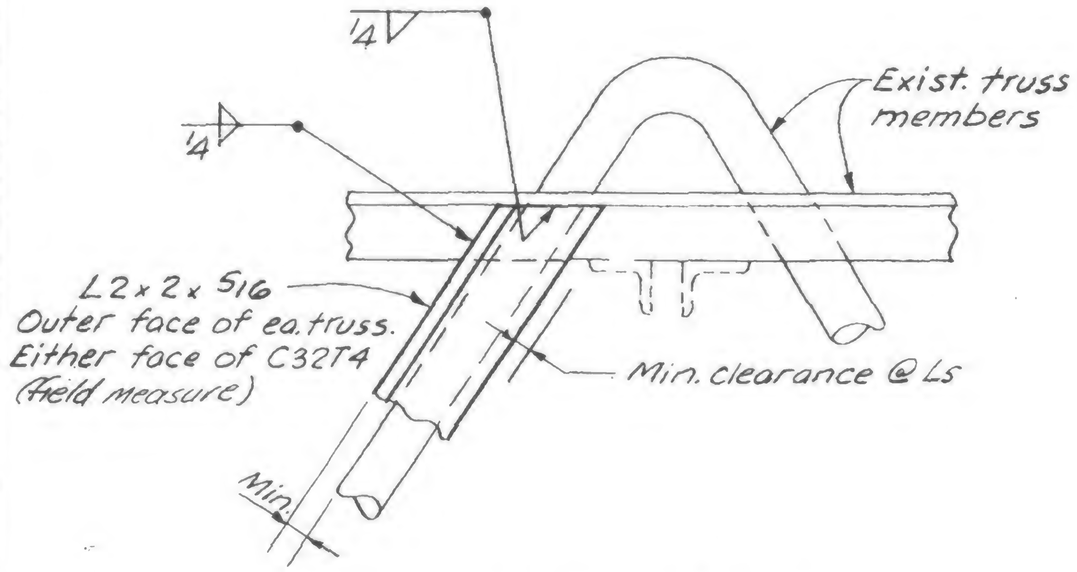

Detail 988A

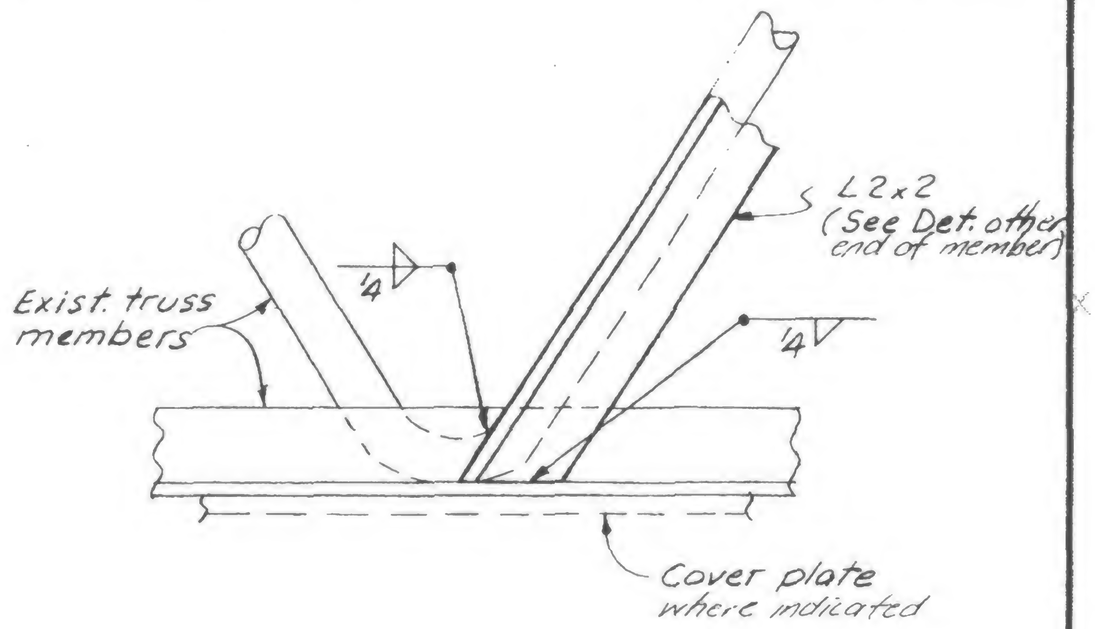

Detail 988B

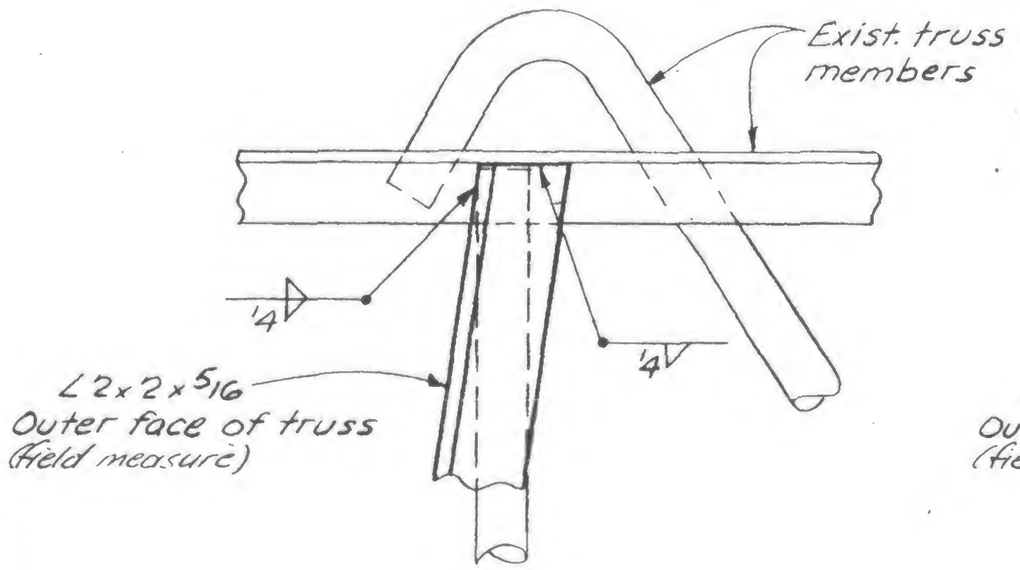

Detail 988C

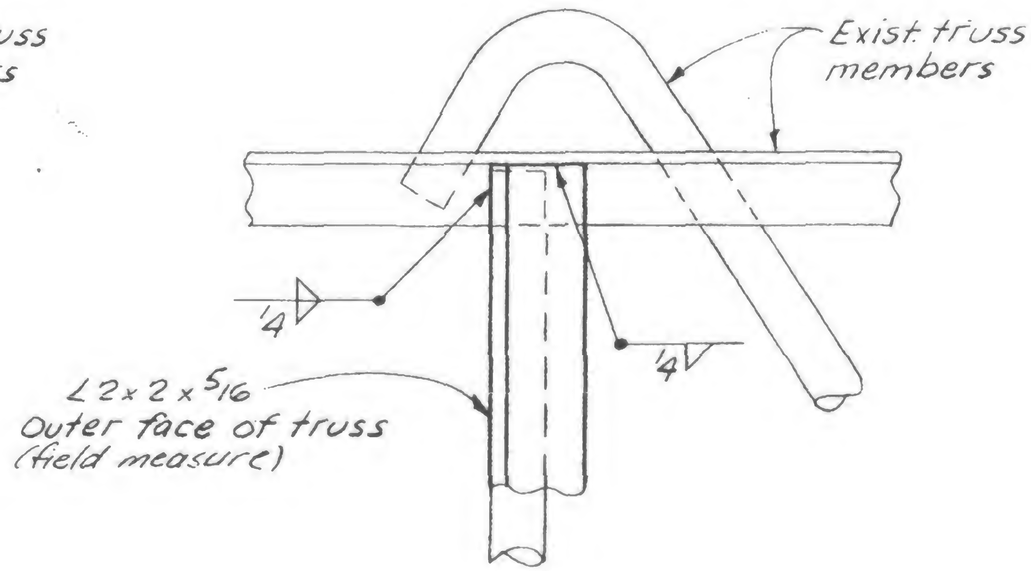

Detail 988D

LICENSED PROFESSIONAL ENGINEER LESLIE E. ROBERTSON No 34360 UNIVERSITY OF THE STATE OF NEW YORK

DESIGNED H. ROET

DRAWN A. FRANQUI

REVIEWED Wab

For Notes see 19-A-985.1

19-A-988.1