SKILLING, HELLE, CHRISTIANSEN, ROBERTSON — Structural & Civil Engineers

PROJECT: THE WORLD TRADE CENTER | TITLE: TRUSS DETAILS - FL 106 | DATE: 1/27/71

REVISIONS

7/30/71

Printed 5/9/79

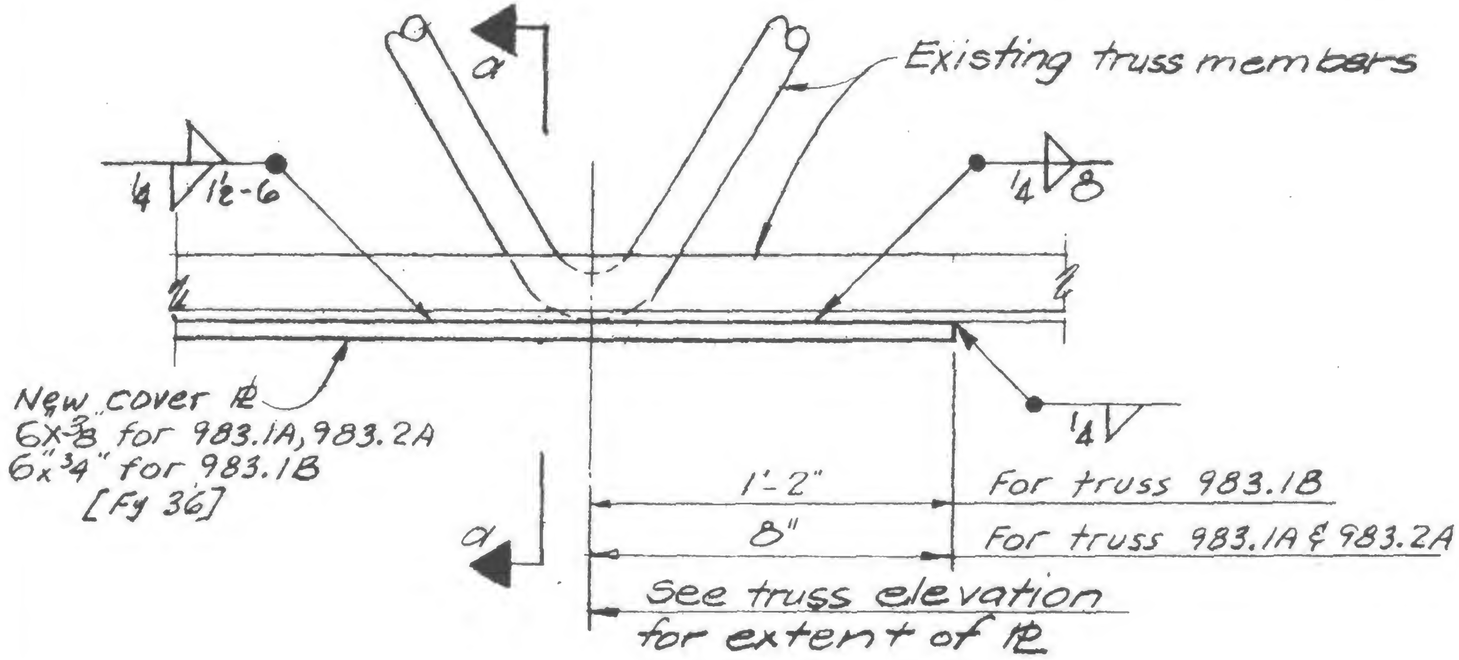

Elevation

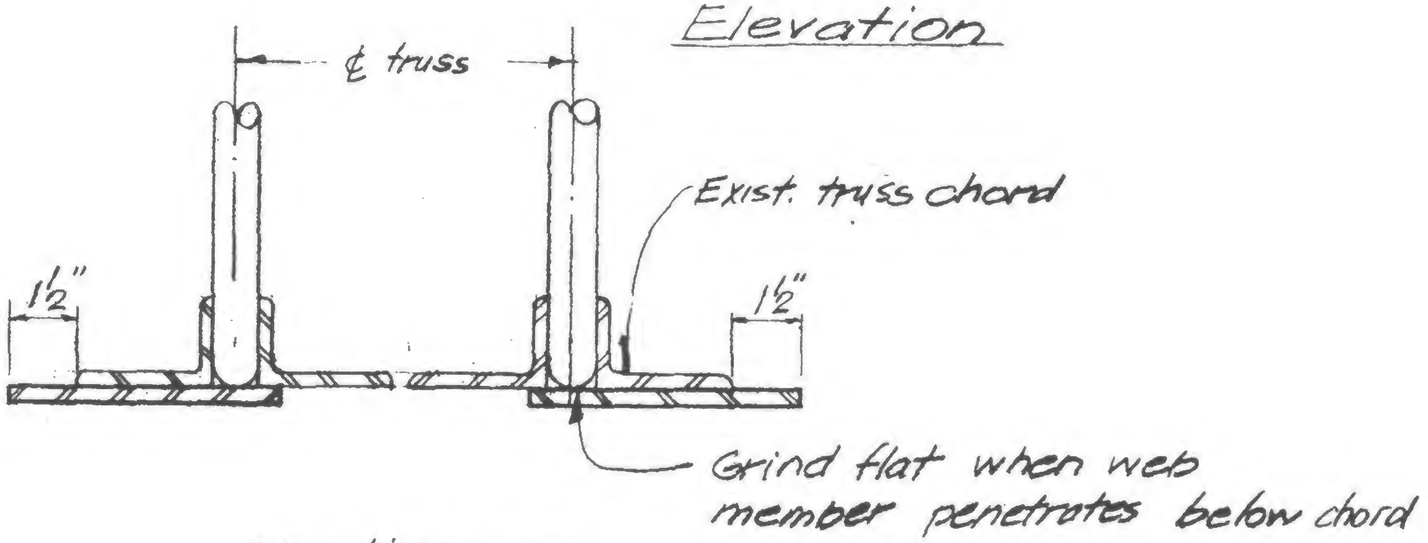

Section a-a

DETAIL 989A

LICENSED PROFESSIONAL ENGINEER — LESLIE E. ROBERTSON — No. 34980 — UNIVERSITY OF THE STATE OF NEW YORK

DESIGNED

DRAWN: P. Orelli

REVIEWED

19-A-9891