SKILLING, HELLE, CHRISTIANSEN, ROBERTSON — Structural & Civil Engineers

PROJECT: THE WORLD TRADE CENTER | TITLE: LOUVER SUPPORT REPAIRS - FL. 108 | DATE: 2/5/71

REVISIONS

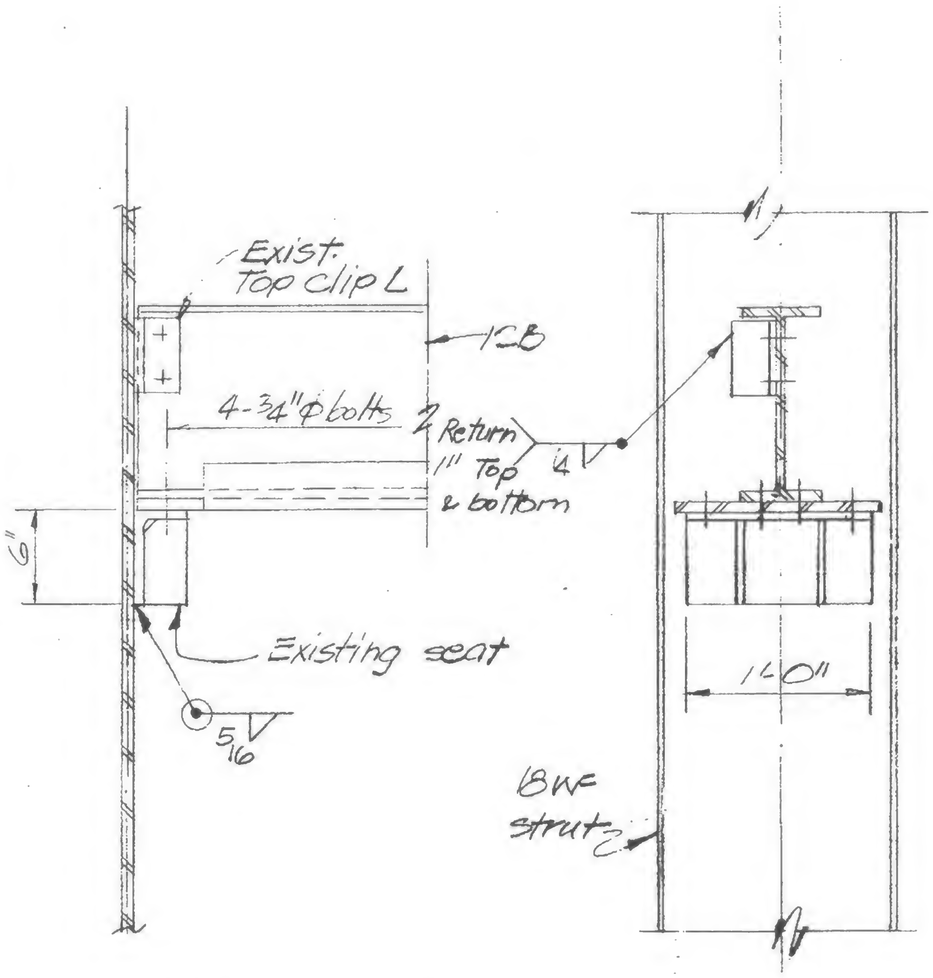

Remove existing connection material, relocate beam and reweld existing connection material to 18WF strut.

Detail 991A

See 9-AB9-1, 9-AB9-2.1, 9-AB9-3, 9-AB9-4.1 for location, Typical Detail 991A thru 991E

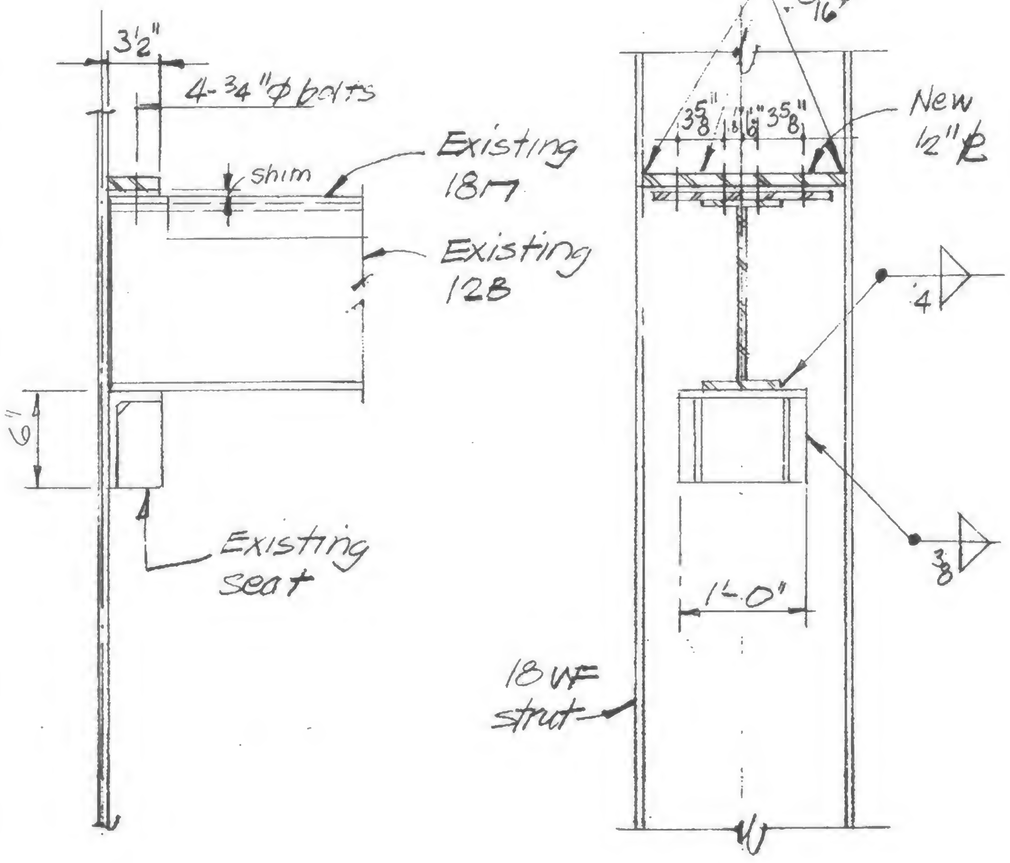

Remove existing connection material, rotate channel beam, assemble to position indicated in elevation, reweld existing connection material to 18WF strut and install new material as indicated.

Detail 991B

LICENSED PROFESSIONAL ENGINEER LESLIE E. ROBERTSON No. 34360 UNIVERSITY OF THE STATE OF NEW YORK

DESIGNED WAB

DRAWN RDrelin

REVIEWED

19-A-991.1