SKILLING, HELLE, CHRISTIANSEN, ROBERTSON — Structural & Civil Engineers

PROJECT THE WORLD TRADE CENTER | TITLE LOUVER SUPPORT REPAIRS - FL.108 | DATE 2/5/71

REVISIONS

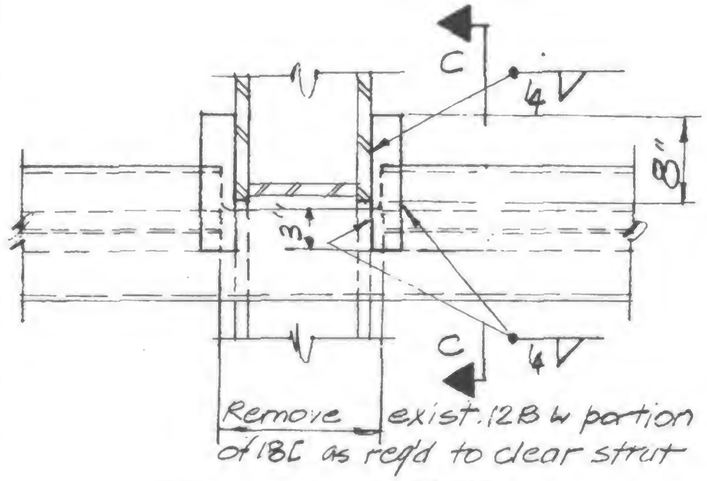

Plan Detail 991C

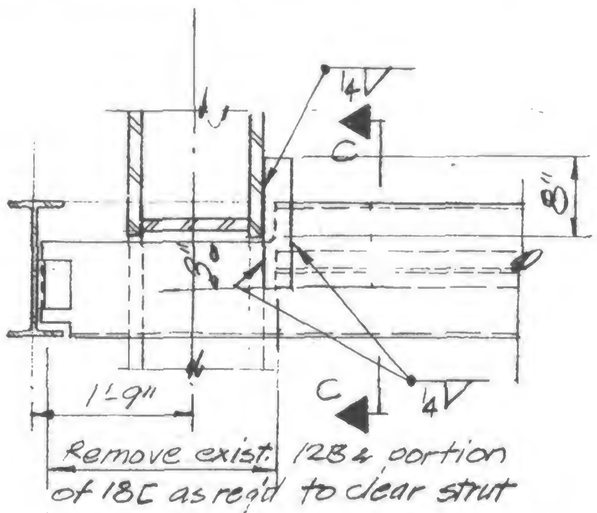

Plan Detail 991D

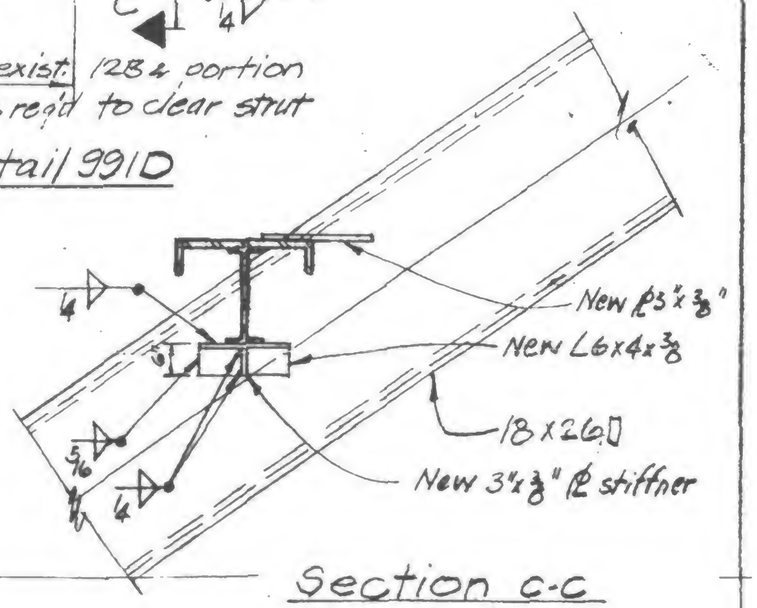

Section C-C

Detail 991C & D

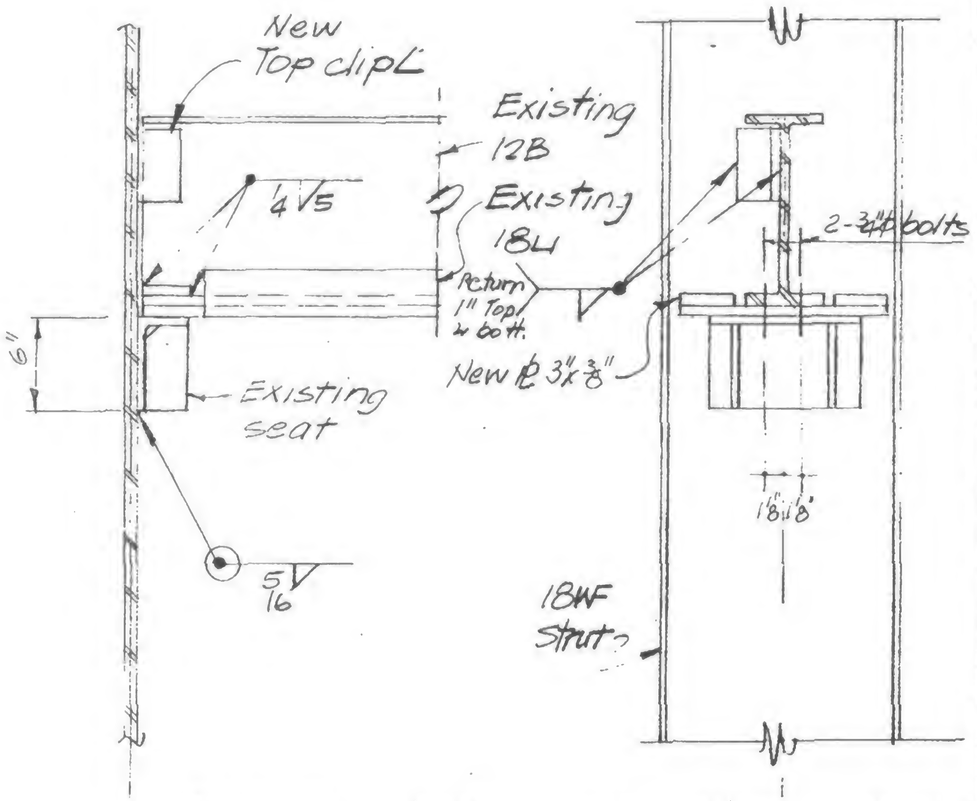

Remove existing connection material, relocate and reweld, rotate existing channel beam assembly and reinstall.

Detail 991E

LICENSED PROFESSIONAL ENGINEER — LESLIE E. ROBERTSON — No. 34360 — UNIVERSITY OF THE STATE OF NEW YORK

DESIGNED

DRAWN P.Orelli

REVIEWED

19-A-991.2