SKILLING, HELLE, CHRISTIANSEN, ROBERTSON · Structural & Civil Engineers

PROJECT THE WORLD TRADE CENTER | TITLE SECTIONS - El. 310 STAIR #4 | DATE 10-29-71

REVISIONS

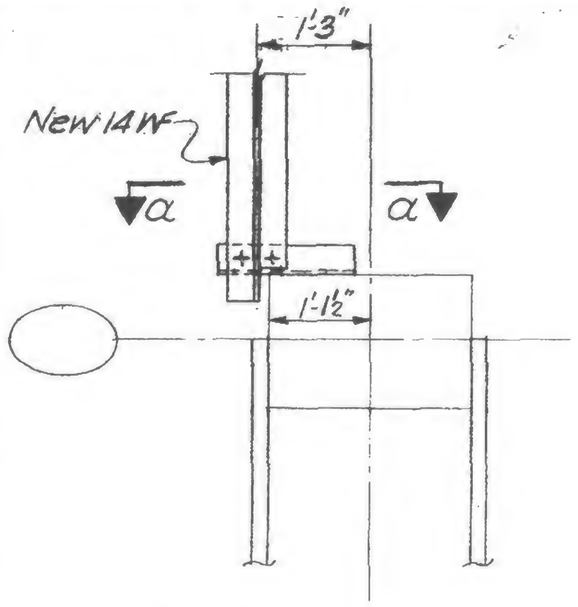

Detail 1049 A

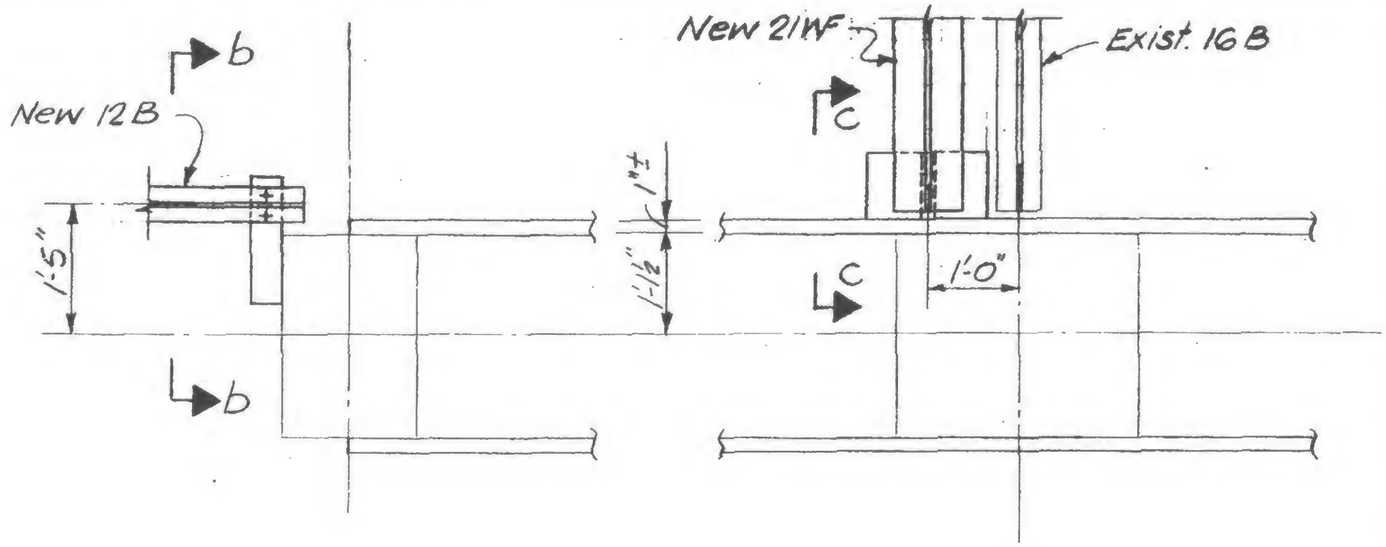

Detail 1049 B

Detail 1049 C

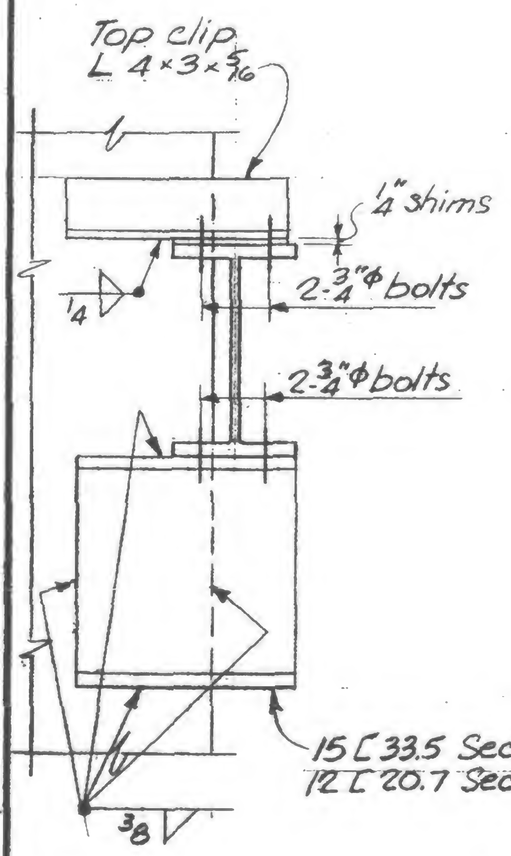

Section a-a

Section b-b opp. hand & as noted

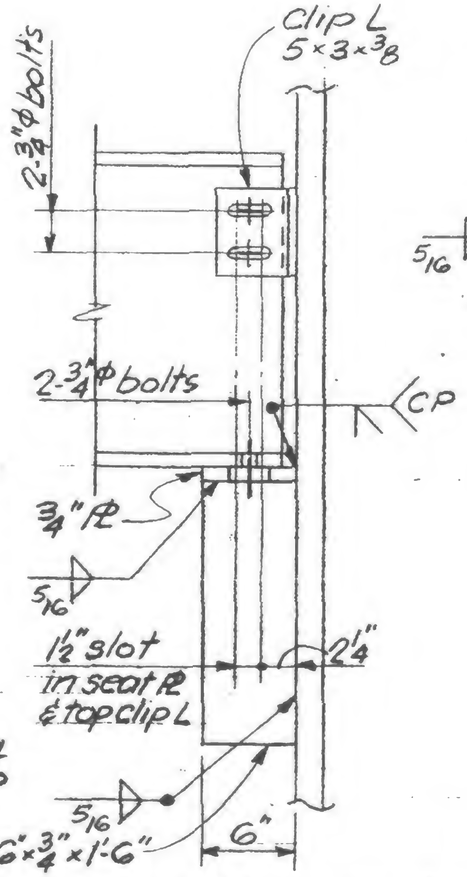

Section c-c

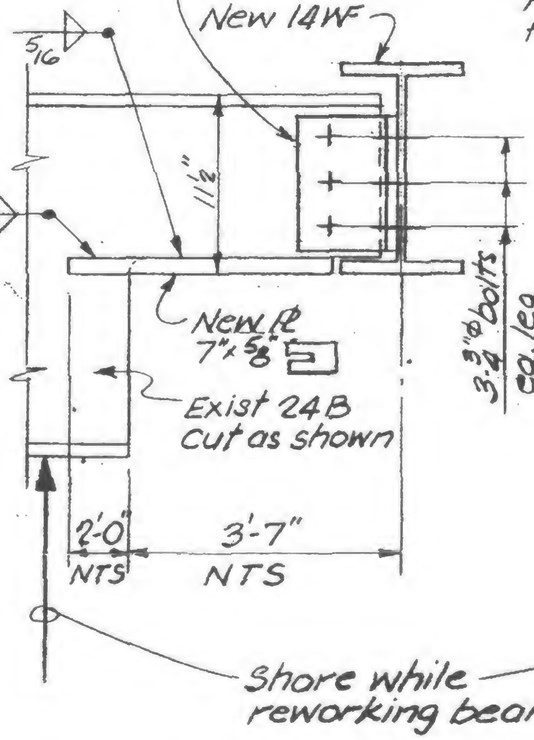

Detail 1049 D

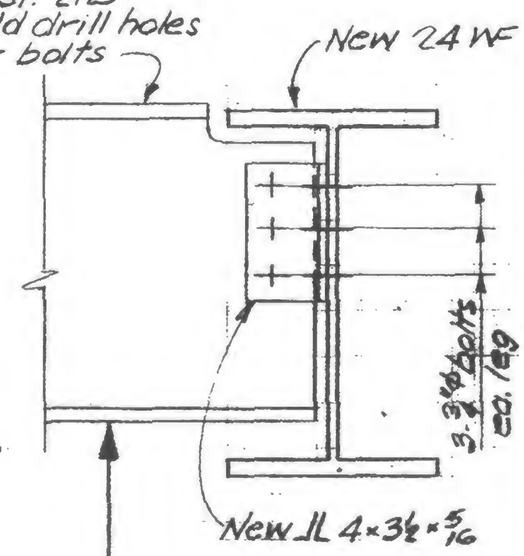

Detail 1049 E

LICENSED PROFESSIONAL ENGINEER
LESLIE E. ROBERTSON
No. 34360
UNIVERSITY OF THE STATE OF NEW YORK

SIGNED

DRAWN
SC

REVIEWED

19-K-1049