SKILLING, HELLE, CHRISTIANSEN, ROBERTSON — Structural & Civil Engineers

PROJECT: THE WORLD TRADE CENTER | TITLE: DETAIL FOR SHEAR HEAD REPAIR K31/3 | DATE: 12-23-71

REVISIONS

1-15-72 Gen. Rev.

6-30-72

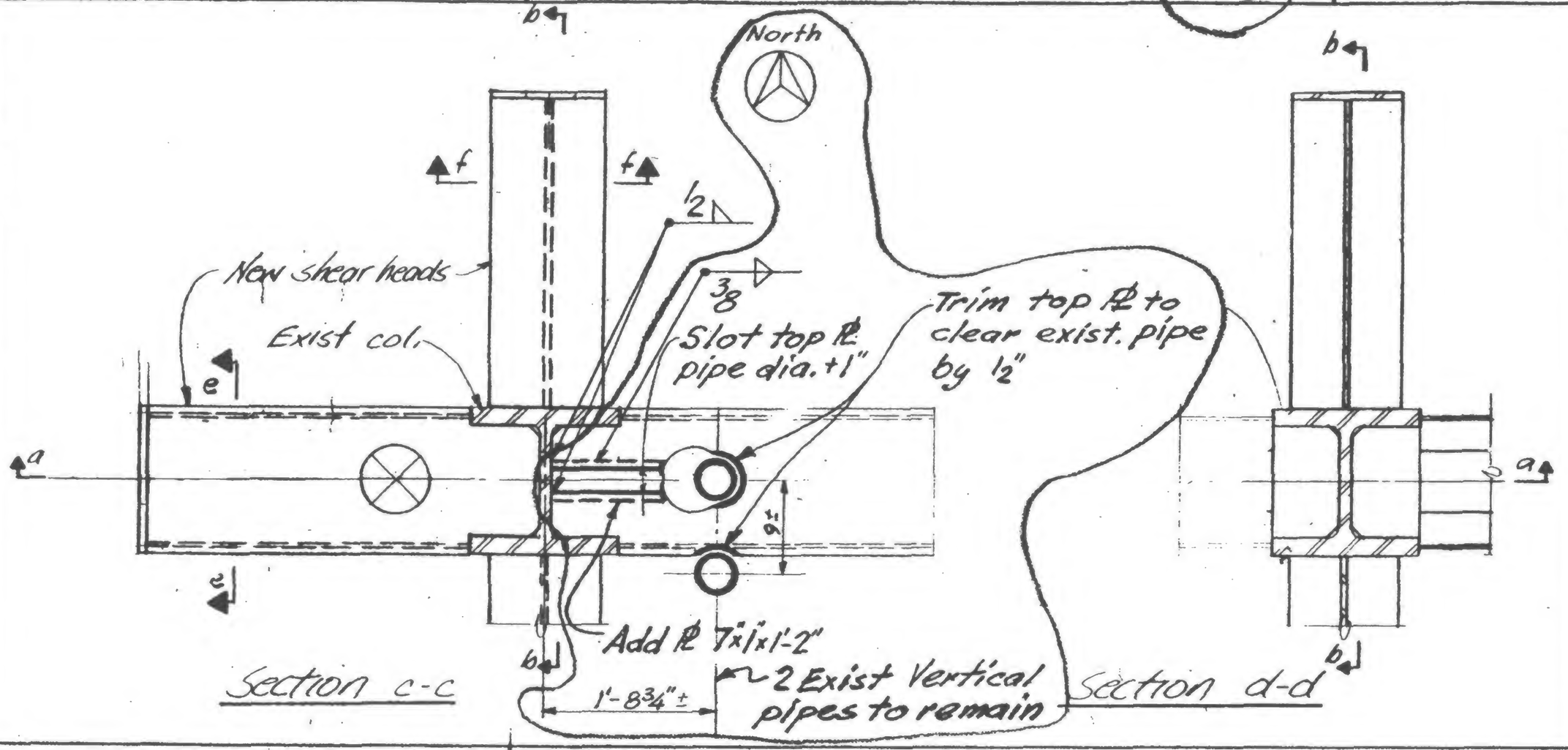

Section c-c

Section d-d

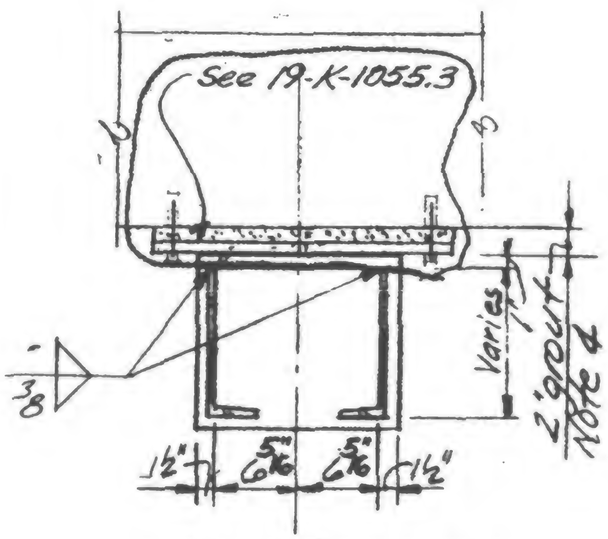

Section e-c

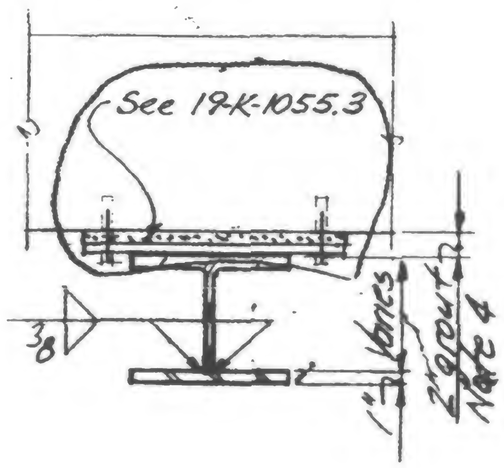

Section f-f

LICENSED PROFESSIONAL ENGINEER — LESLIE E. ROBERTSON — No 34960 — UNIVERSITY OF THE STATE OF NEW YORK

SIGNED

DRAWN

REVIEWED

K31/3

19-K-1055.2