SKILLING, HELLE, CHRISTIANSEN, ROBERTSON — Structural & Civil Engineers

PROJECT: THE WORLD TRADE CENTER | TITLE: HANGER DETAILS | DATE: 1-15-72

REVISIONS

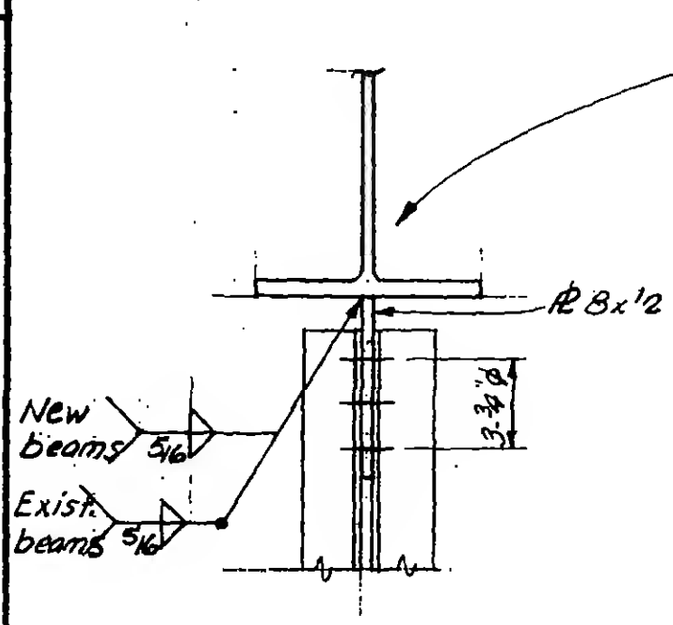

Detail A

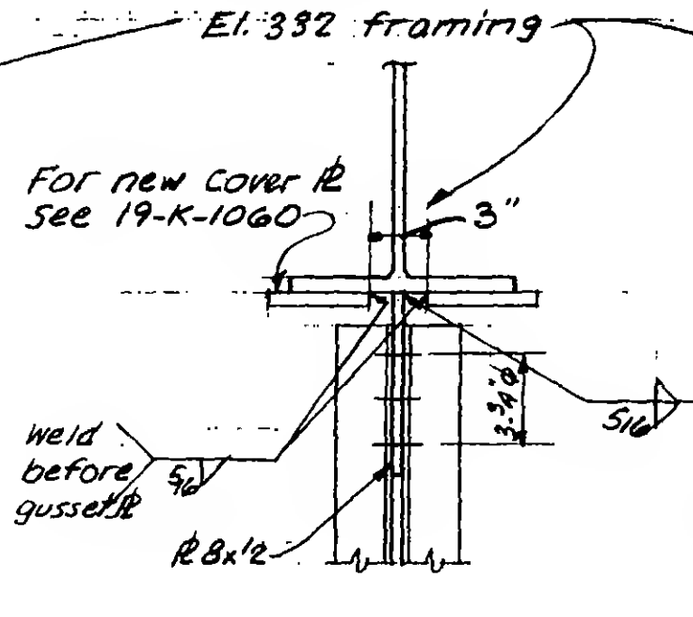

Detail B

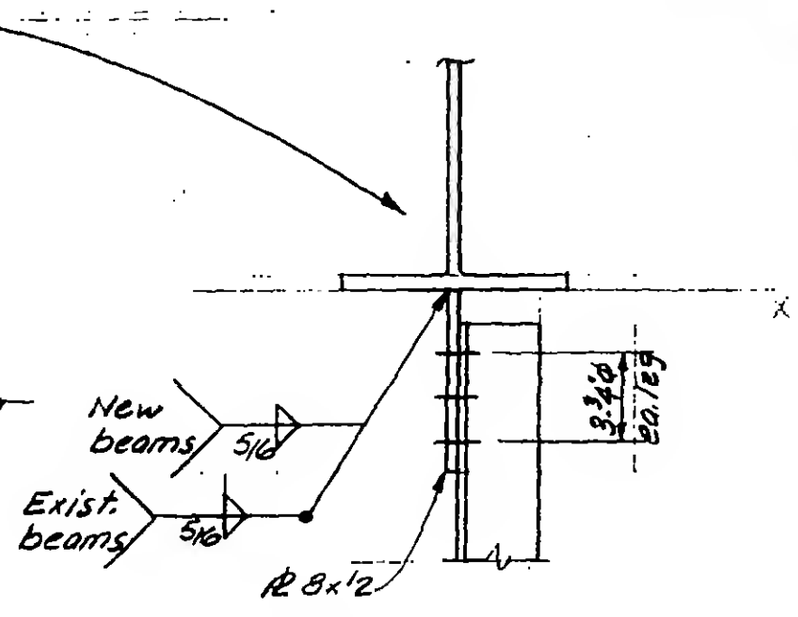

Detail C

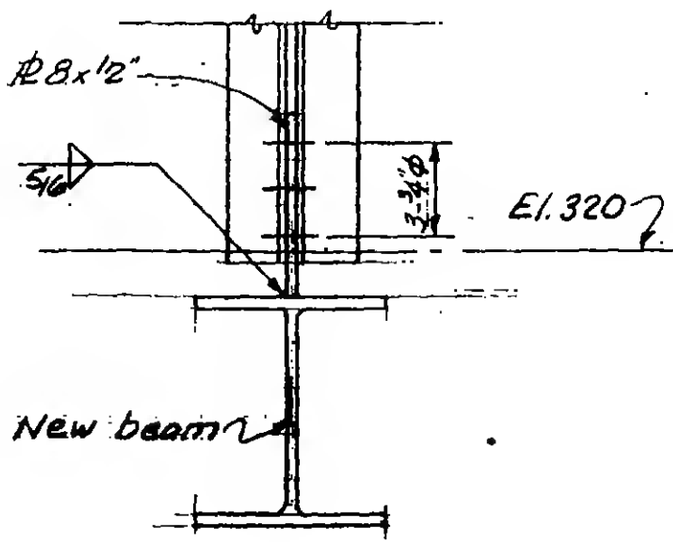

Detail D

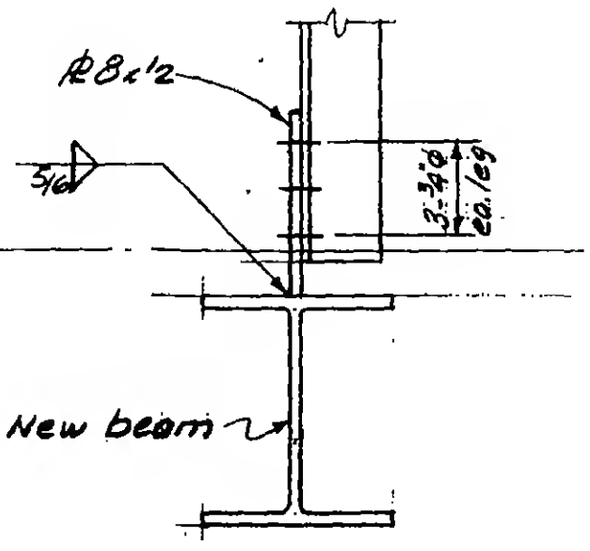

Detail E

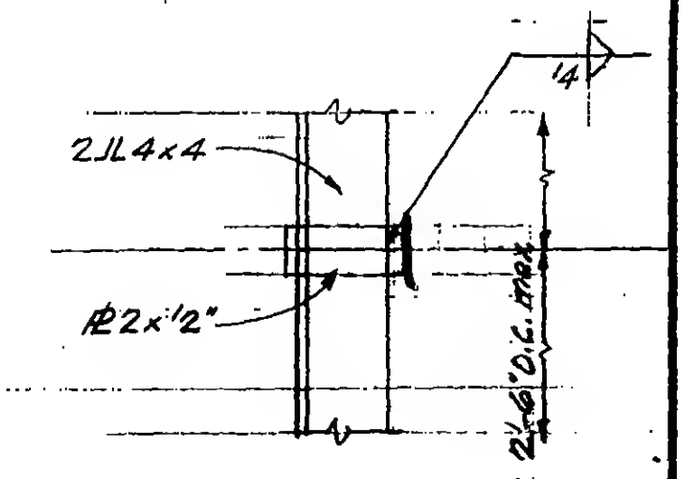

Typical Detail at filler

LICENSED PROFESSIONAL ENGINEER — LESLIE E. ROBERTSON — No. 34360 — UNIVERSITY OF THE STATE OF NEW YORK

DESIGNED W. BREWER

DRAWN A.E. FRANQUI

REVIEWED W. Brewer

19-K-1057