SKILLING, HELLE, CHRISTIANSEN, ROBERTSON — Structural & Civil Engineers

PROJECT: THE WORLD TRADE CENTER | TITLE: PATH - NEW STAIR | DATE: 2-25-72

REVISIONS

9-4-73

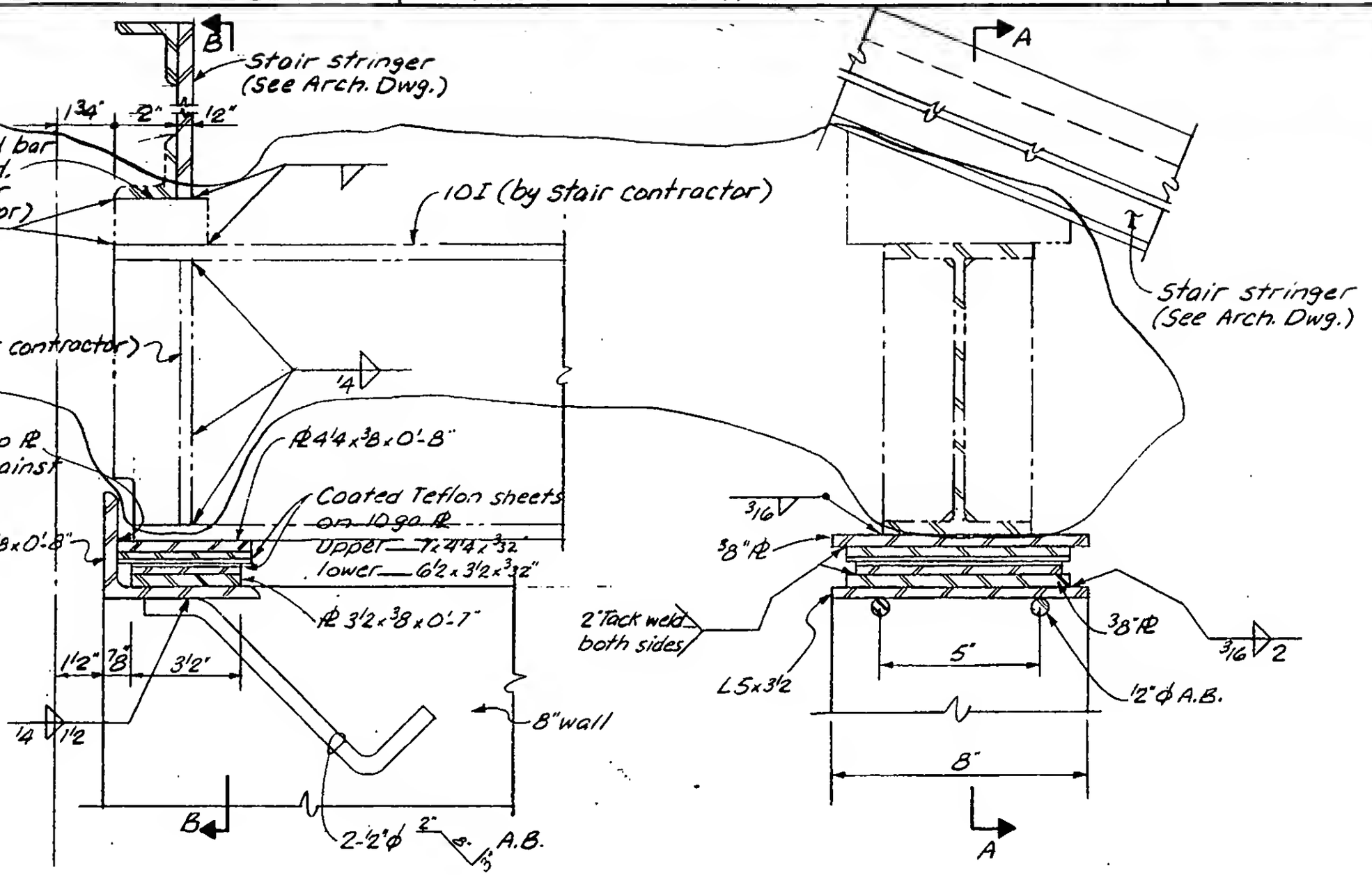

Section A-A

Section B-B

LICENSED PROFESSIONAL ENGINEER — LESLIE E. ROBERTSON — No. 34360 — UNIVERSITY OF THE STATE OF NEW YORK

DESIGNED: E.T.L.

DRAWN: A.F.

REVIEWED

3" = 1'-0"

19-J-1065