SKILLING, HELLE, CHRISTIANSEN, ROBERTSON — Structural & Civil Engineers

PROJECT: THE WORLD TRADE CENTER | TITLE: OPENINGS IN BEAMS FOR STORM SEWER PIPES - ZONE K5 | DATE: 5-12-72

REVISIONS

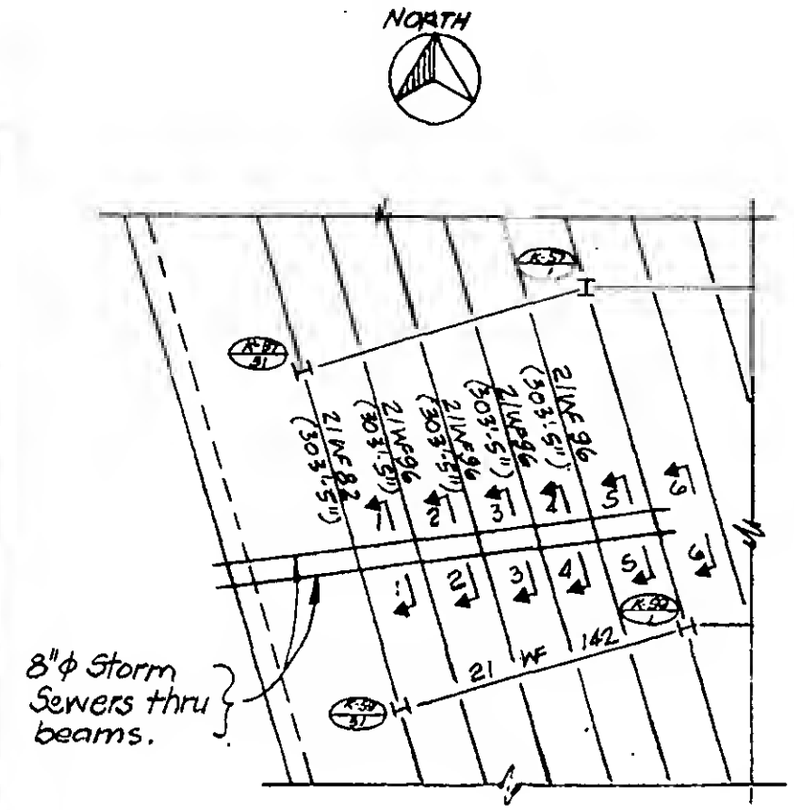

Key Plan Zone K-5

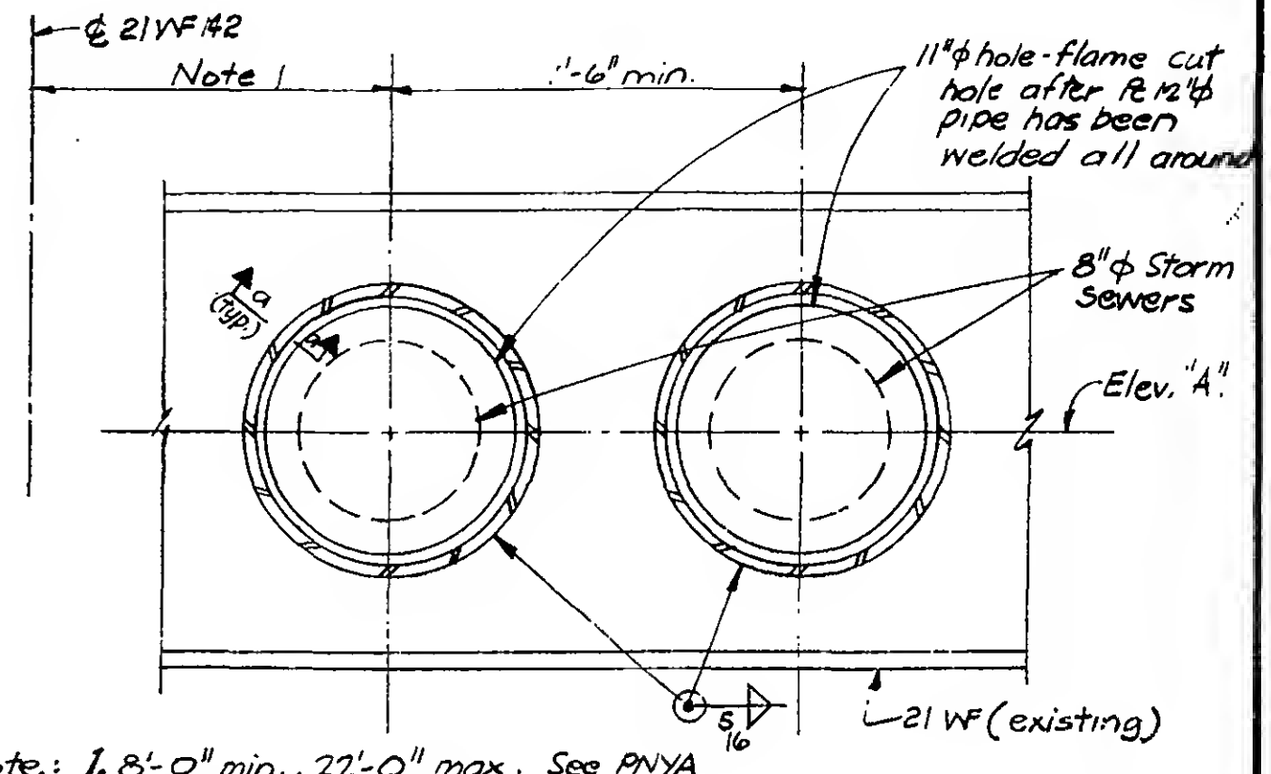

Note: 1. 8'-0" min., 22'-0" max. See PNYA Dwgs. for location.

View 1 thru 6

	Elev. "A"
View 1	302'-4 9/16"
View 2	302'-5 7/16"
View 3	302'-6 6/16
View 4	302'-6 11/16
View 5	302'-7 3/8"
View 6	302'-8"

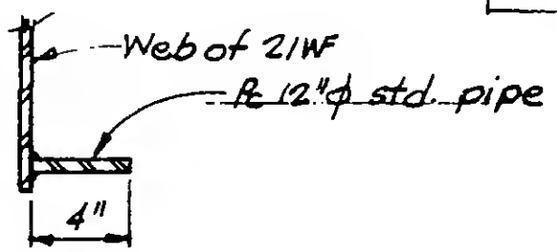

Section a-a

LICENSED PROFESSIONAL ENGINEER — LESLIE E. ROBERTSON — No. 34360 — UNIVERSITY OF THE STATE OF NEW YORK

DESIGNED JTM

DRAWN

REVIEWED

19-K-1069