SKILLING, HELLE, CHRISTIANSEN, ROBERTSON — Structural & Civil Engineers

PROJECT: THE WORLD TRADE CENTER

TITLE: GRATING & SUPPORTS AT F.A.I. OPENINGS - EL. 332

DATE: 4-17-74

REVISIONS

4-24-74

10-21-74

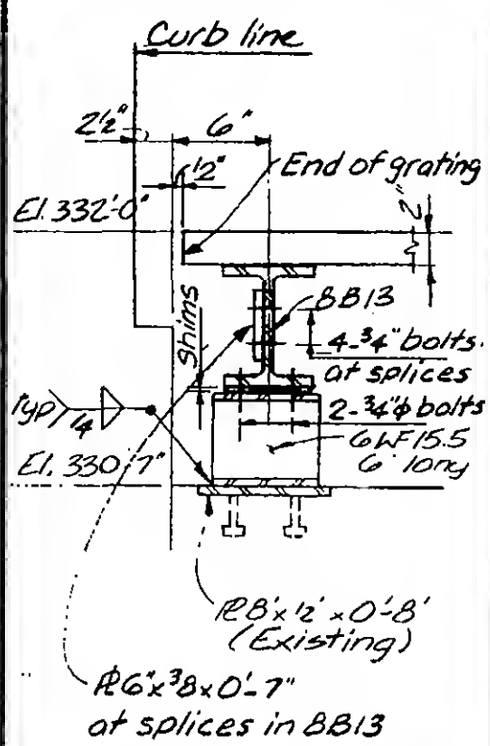

A1

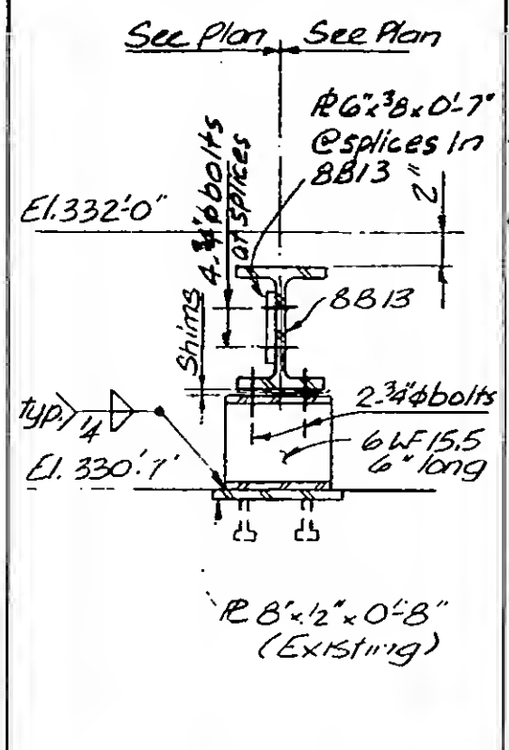

A2

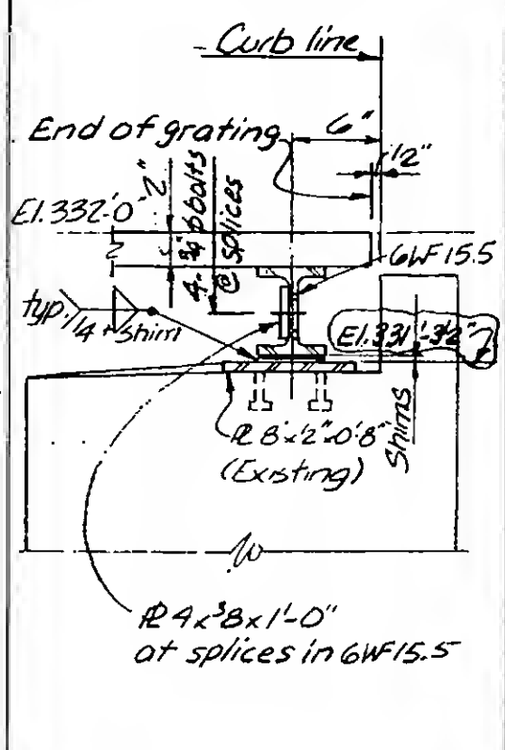

A3

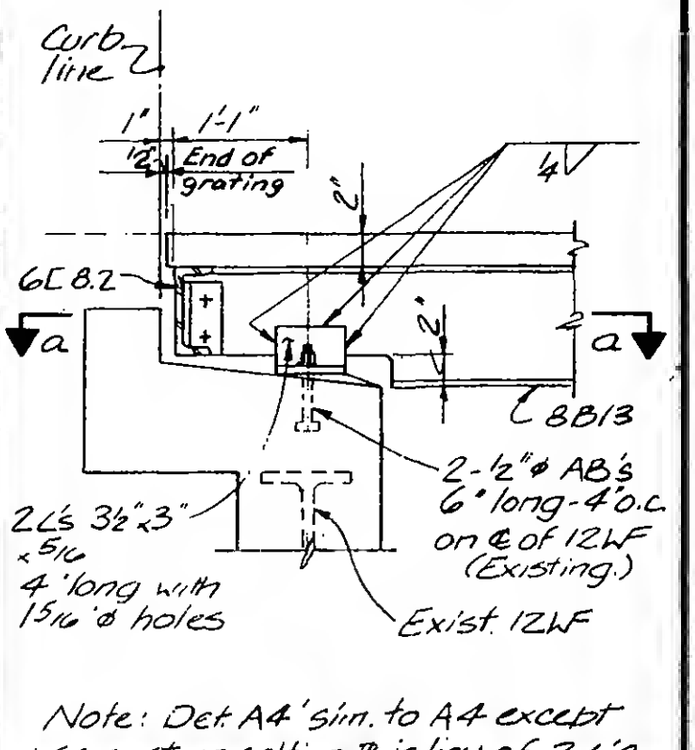

Note: Det A4' sim. to A4 except use existing setting PL in lieu of 2 L's and anchor bolts. Top of setting PL: El. 331'-3½".

A4 | A4'

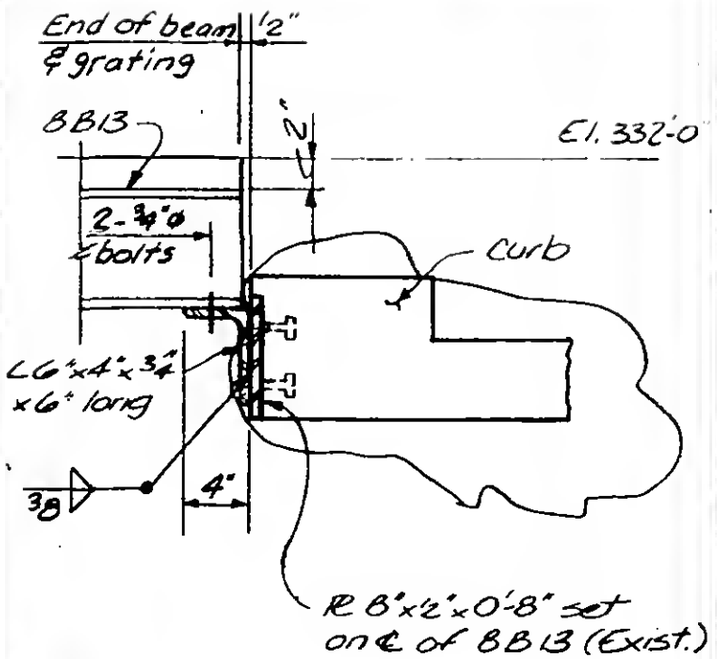

A5

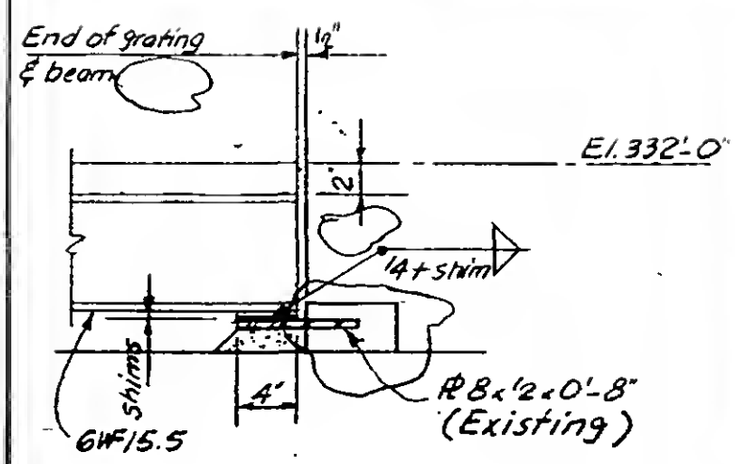

A6 | C4

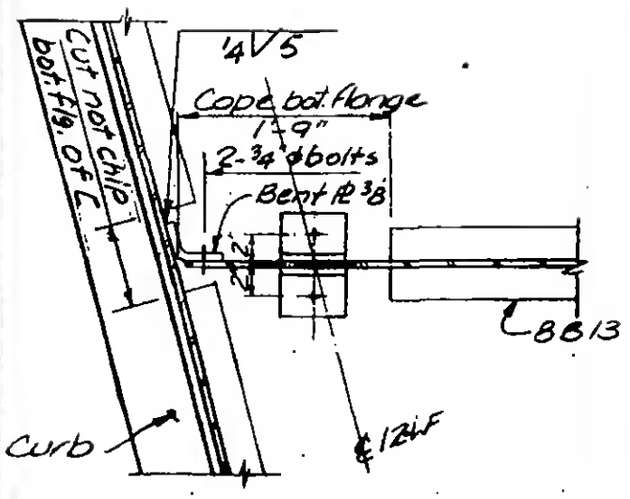

a

19-K-1094.2

LICENSED PROFESSIONAL ENGINEER — LESLIE E. ROBERTSON — No. 34360 — UNIVERSITY OF THE STATE OF NEW YORK

DESIGNED J.W.

DRAWN J.B.

REVIEWED J.T.M.