SKILLING, HELLE, CHRISTIANSEN, ROBERTSON — Structural & Civil Engineers

PROJECT: THE WORLD TRADE CENTER | TITLE: TOWER B-PH-SHAFT 50 EXTENSION | DATE: 7-10-72

REVISIONS

R

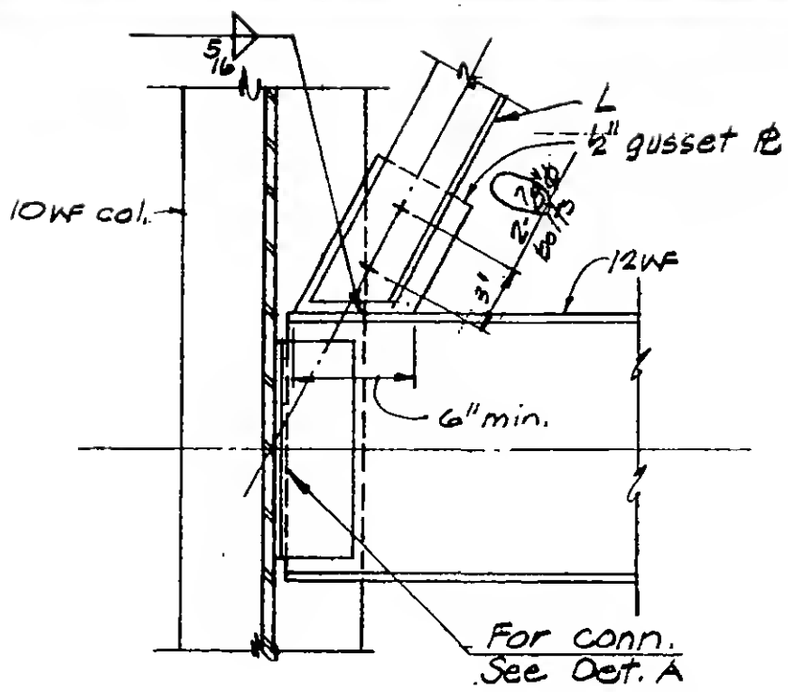

Detail C

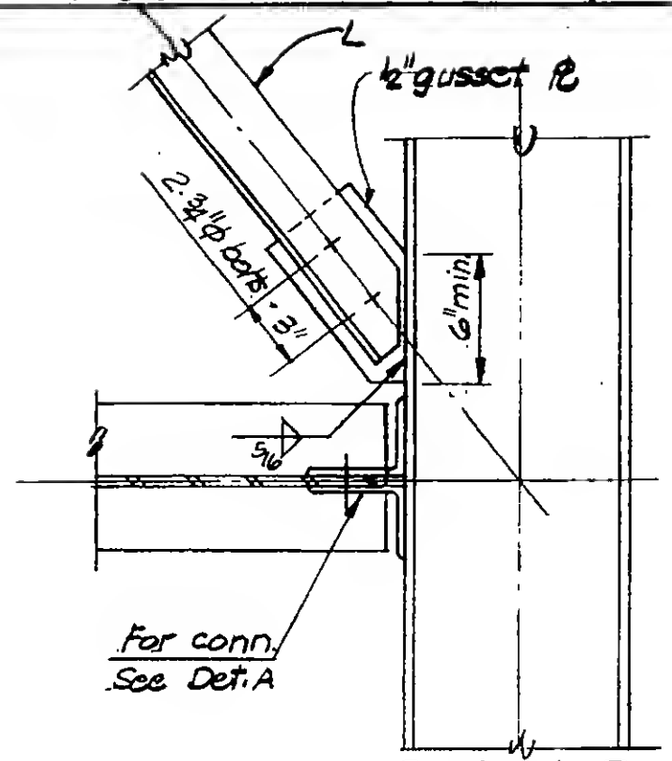

Detail D

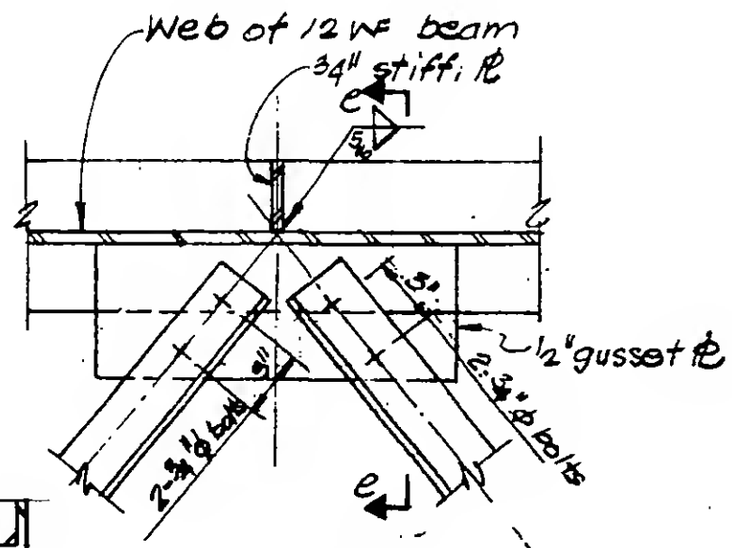

Detail E

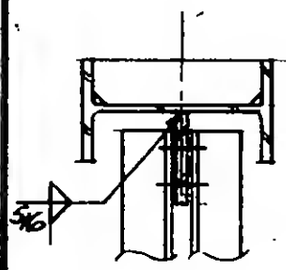

Section e-e

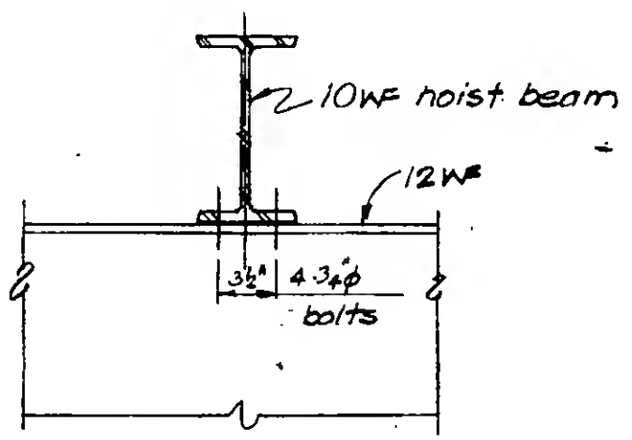

Detail F

LICENSED PROFESSIONAL ENGINEER — LESLIE E. ROBERTSON — No. 34360 — UNIVERSITY OF THE STATE OF NEW YORK

DESIGNED M. Ramani

DRAWN P.M. Ozeki

REVIEWED

19-B-1108.B