SKILLING, HELLE, CHRISTIANSEN, ROBERTSON — Structural & Civil Engineers

PROJECT: THE WORLD TRADE CENTER | TITLE: TOWER B-P.H.-SHAFT 50 EXTENSION | DATE: 1-10-72

REVISIONS

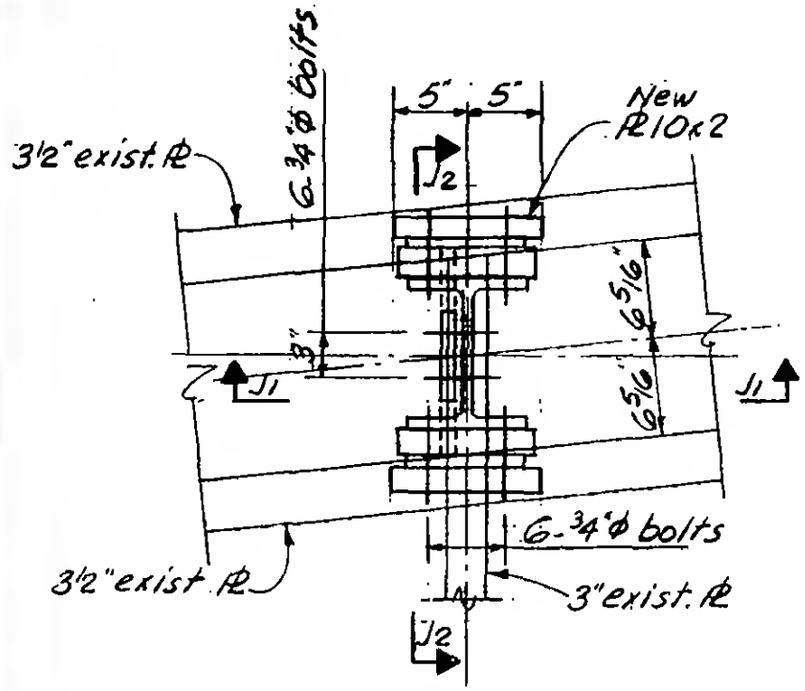

Detail J

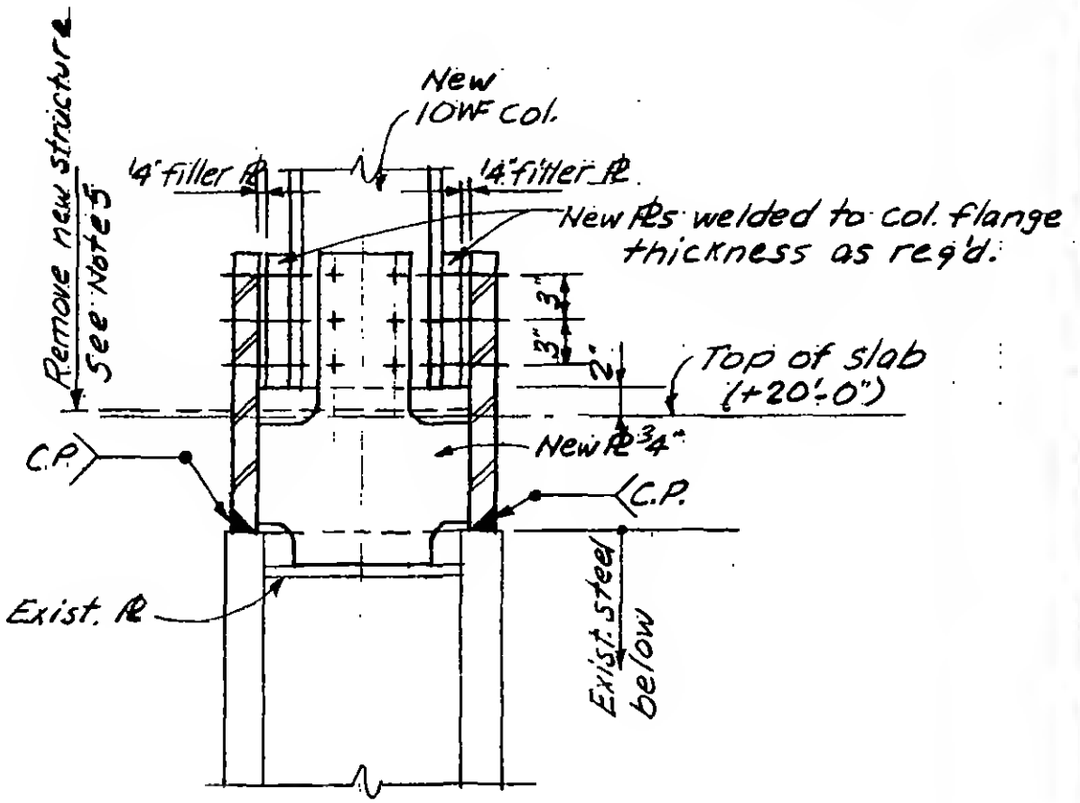

Section J2-J2

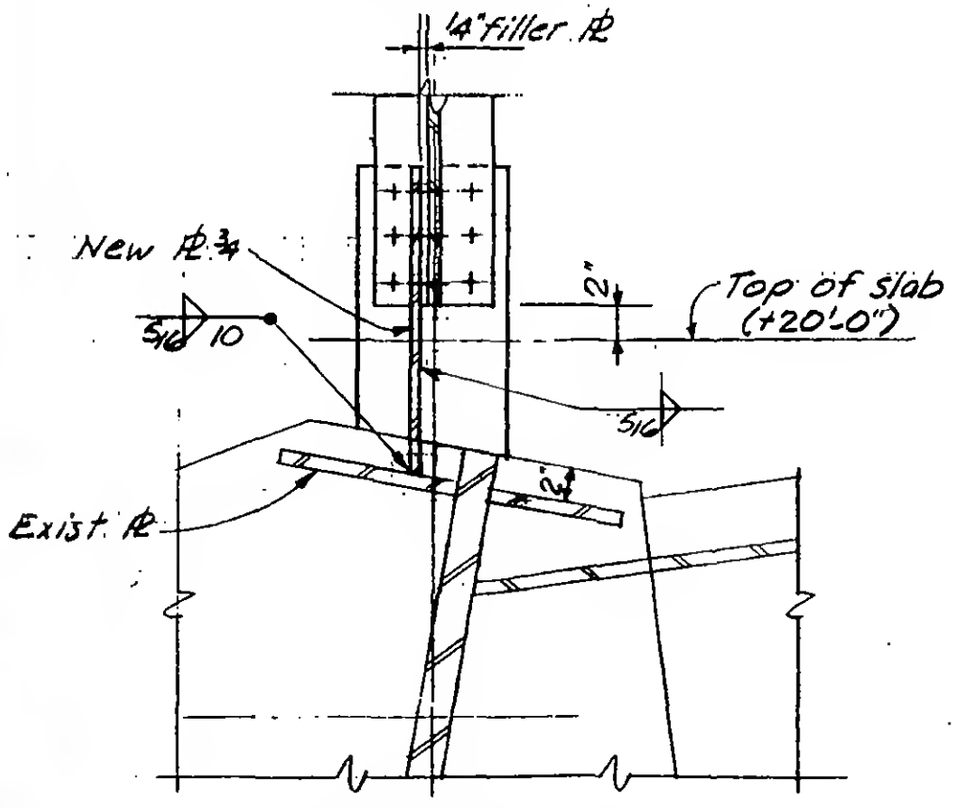

Section J1-J1

LICENSED PROFESSIONAL ENGINEER — LESLIE E. ROBERTSON — No. 34360 — UNIVERSITY OF THE STATE OF NEW YORK

DESIGNED: M.RAMANI

DRAWN: A.FRANQUI

REVIEWED

19-B-1108.7