SKILLING, HELLE, CHRISTIANSEN, ROBERTSON

PROJECT THE WORLD TRADE CENTER | TITLE TOWER [redacted] SHAFT 50 EXTENSION | DATE 1-10-72

REVISIONS

R

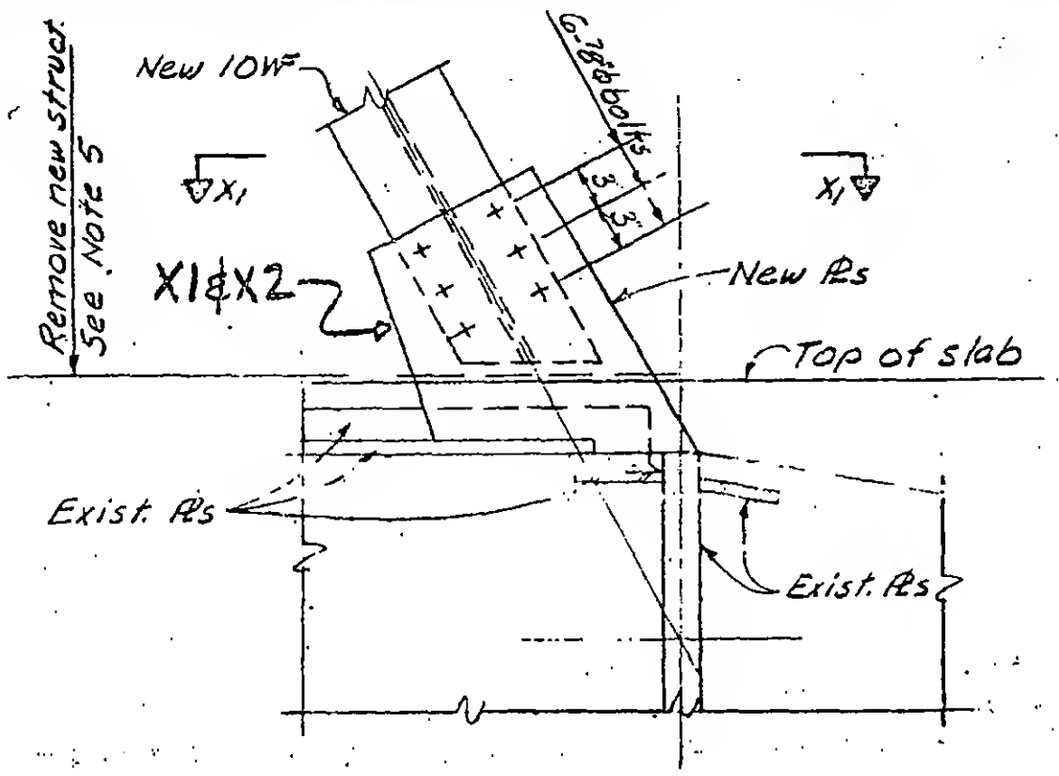

Detail X

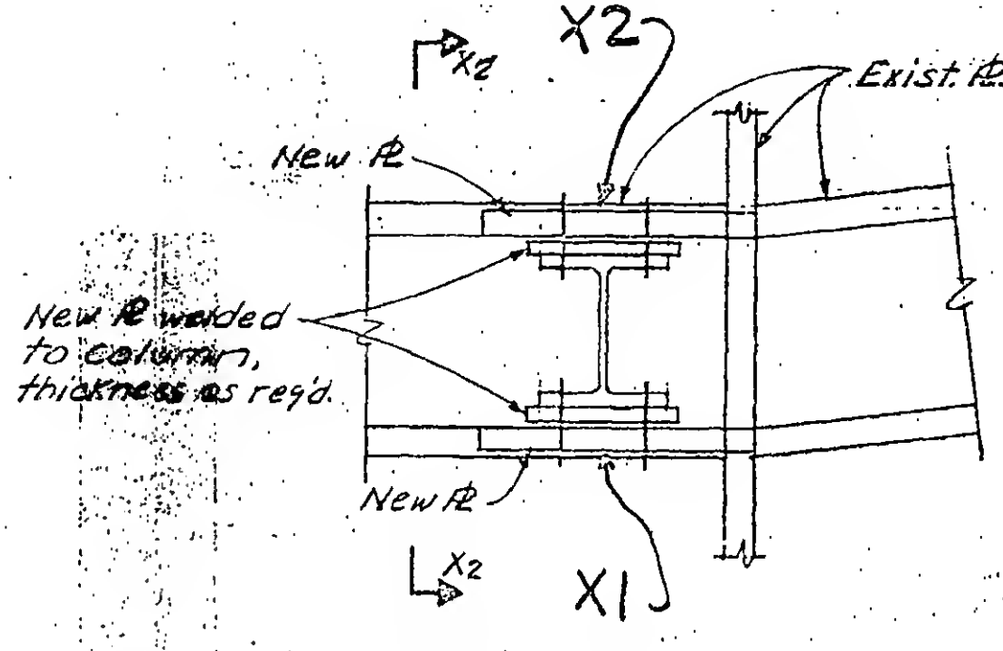

Section X1 – X1

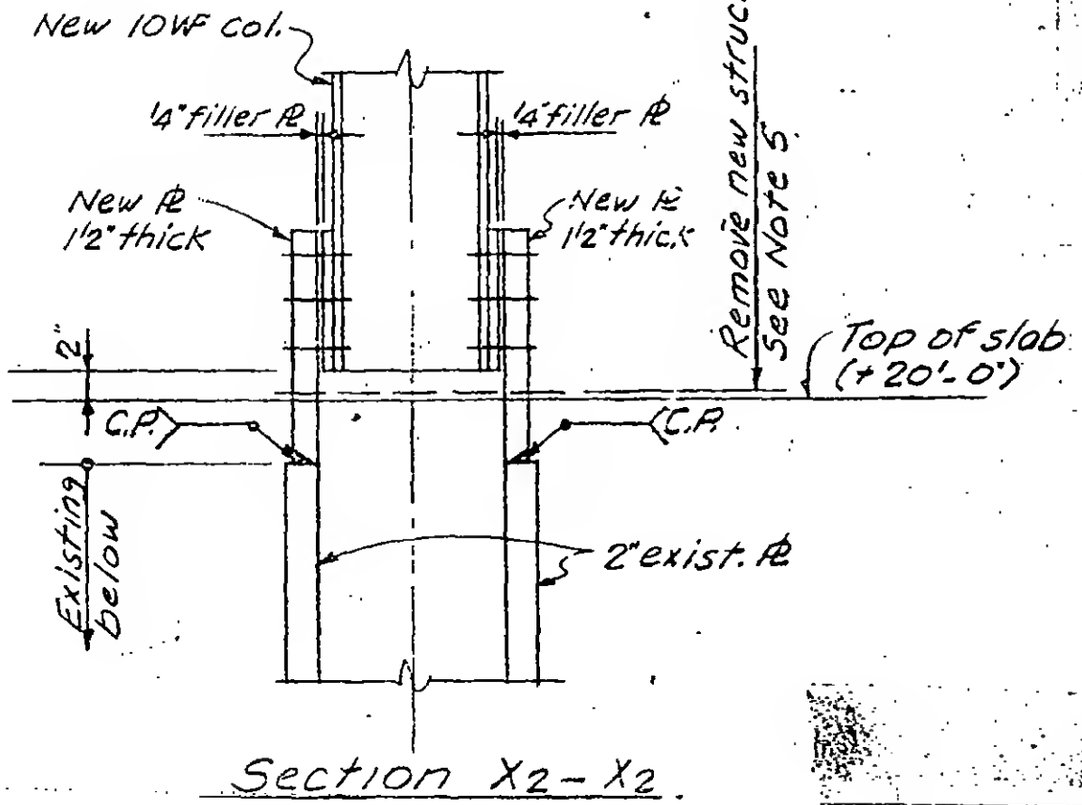

Section X2 – X2

SKILLING - HELLE CHRISTIANSEN - ROBERTSON
Structural & Civil Engineers
☑ APPROVED
☐ APPROVED AS NOTED
☑ RESUBMIT
☐ REJECTED
Date 3/6/72 By ALR

LICENSED PROFESSIONAL ENGINEER LESLIE E. ROBERTSON No 34360 OF THE STATE OF NEW YORK

DESIGNED M. RAMANI

19-B-1108.14

ERECTION PLAN E9