SKILLING, HELLE, CHRISTIANSEN, ROBERTSON — Structural & Civil Engineers

PROJECT: THE WORLD TRADE CENTER | TITLE: TEMPORARY RELOCATION OF ELEV. GO MACHINE | DATE: 2-28-72

REVISIONS

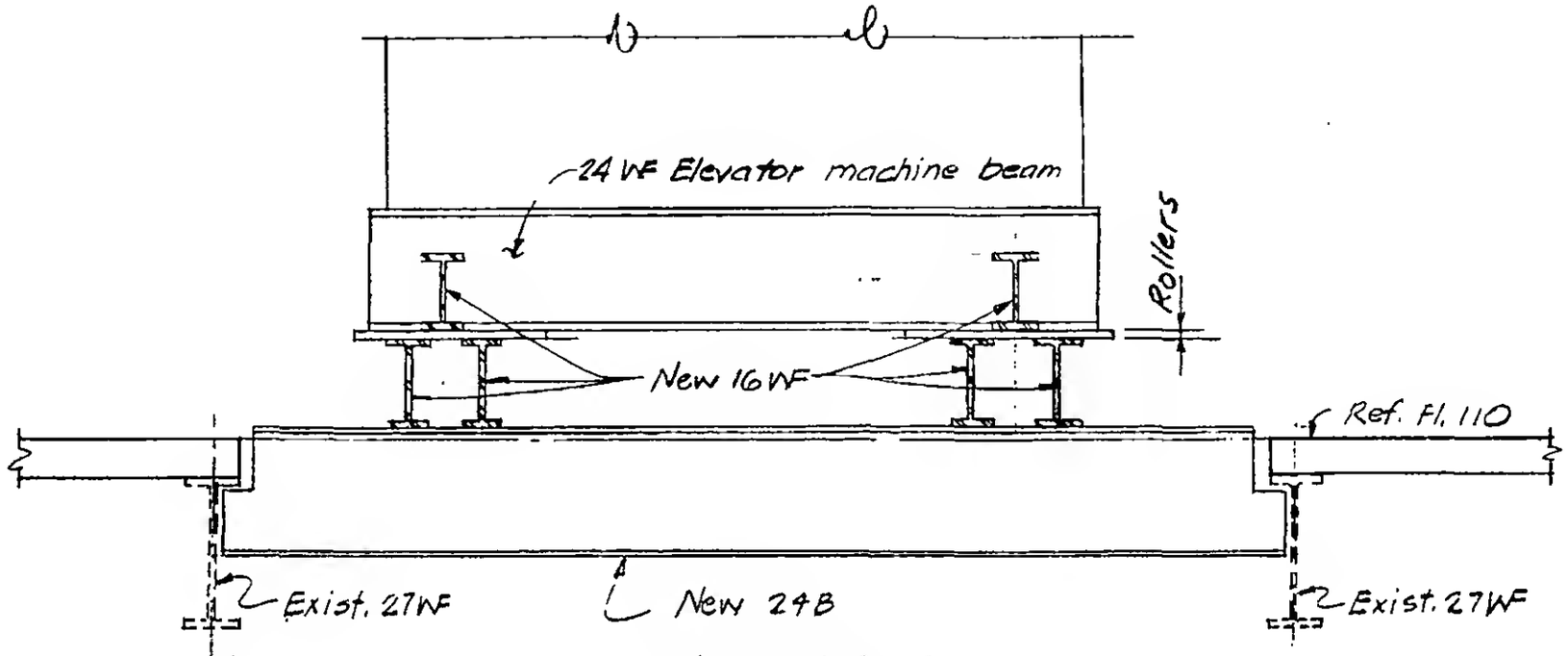

Section GG-GG

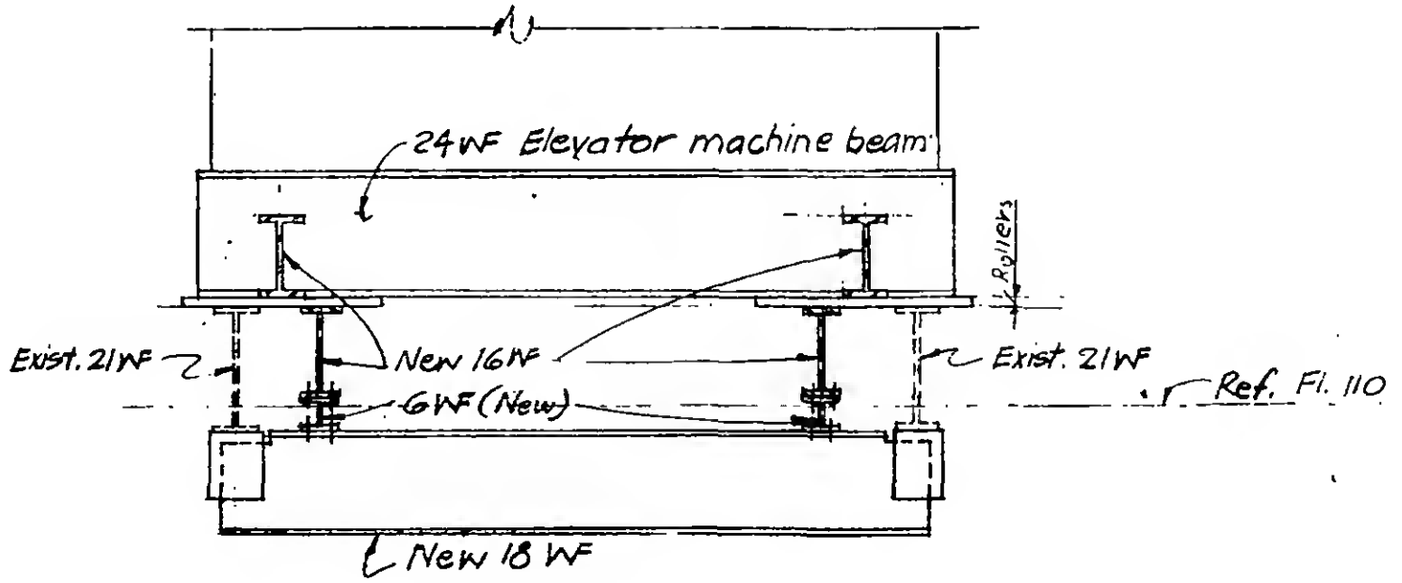

Section HH-HH

LICENSED PROFESSIONAL ENGINEER — LESLIE E. ROBERTSON — No. 34360 — UNIVERSITY OF THE STATE OF NEW YORK

DESIGNED: M. Ramani

DRAWN: P.M. Orelli

REVIEWED: L.E.R.

19-B-110B..1B