File WTC 11700

SKILLING, HELLE, CHRISTIANSEN, ROBERTSON — Structural & Civil Engineers

PROJECT: THE WORLD TRADE CENTER | TITLE: TOWER B EL. 284 - NEW SLAB OPENING | DATE: 6-12-72

REVISIONS

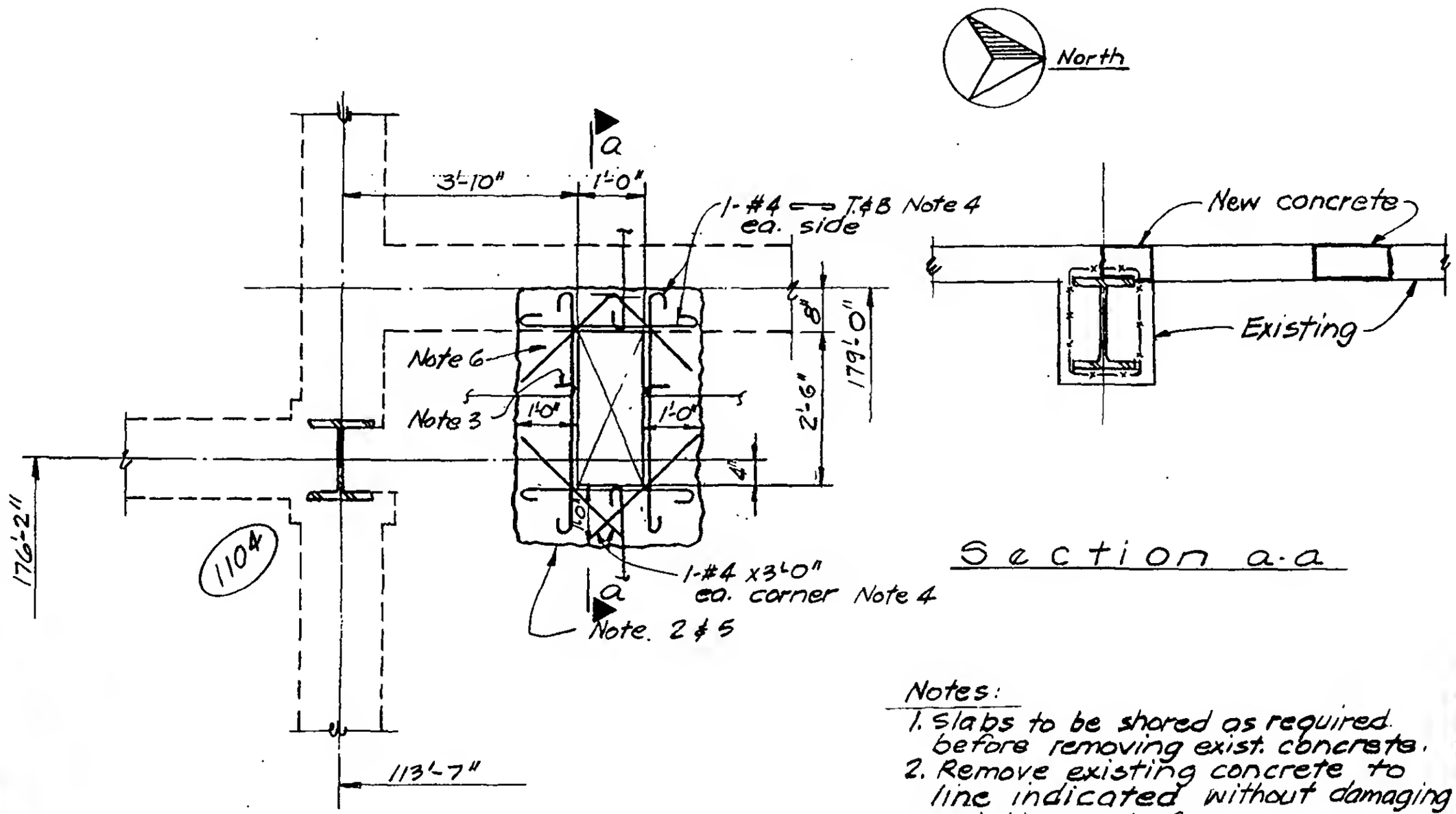

Section a-a

Part Plan

See M-B-10 dated 6-1-72 Bul. No. B-163

Notes:

1. Slabs to be shored as required before removing exist. concrete.
2. Remove existing concrete to line indicated without damaging existing reinf.
3. Cut existing reinf. and hook at edge of opening.
4. Add new reinf. as indicated.
5. Clean face of existing concrete and thoroughly coat entire surface with epoxy bonding compound.
6. Cast slab to edge of new opening using approved "non-shrink" f'c: 4000 psi concrete.

LICENSED PROFESSIONAL ENGINEER — LESLIE E. ROBERTSON — No. 34360 — UNIVERSITY OF THE STATE OF NEW YORK

DESIGNED

DRAWN P.M. Orski

REVIEWED

19-B-1115.1