REPAIR DETAIL FLOOR 107 6-16-72

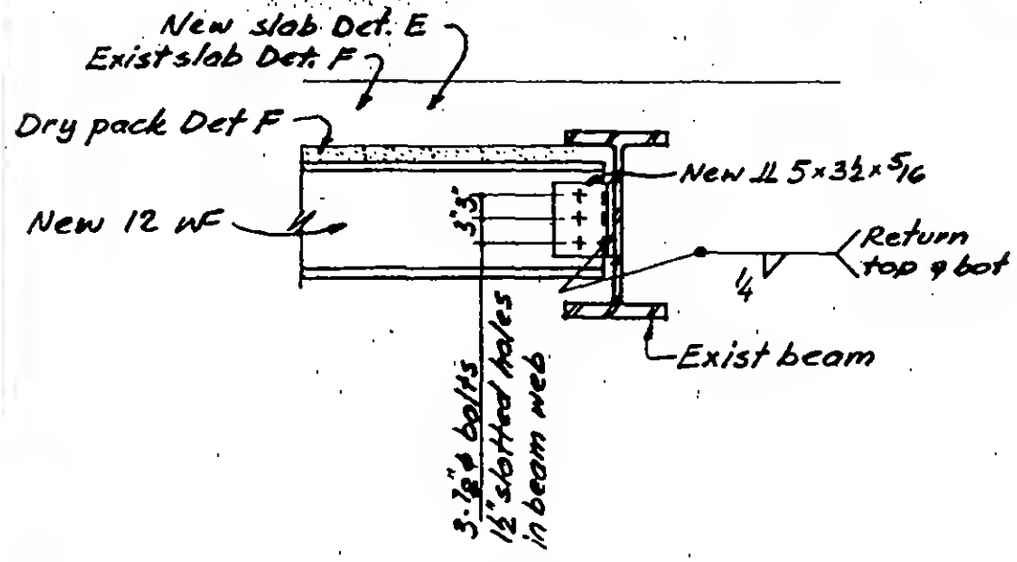

Detail E

Detail F

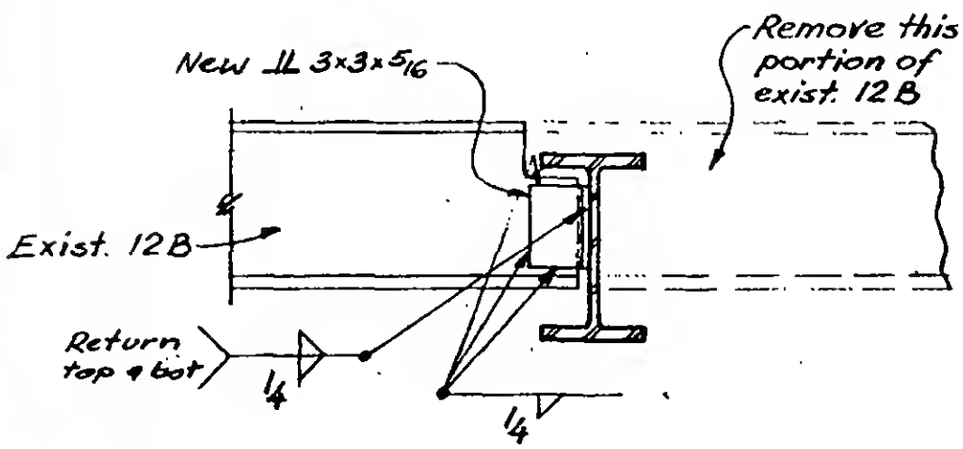

Detail G

LICENSED PROFESSIONAL ENGINEER
LESLIE E. ROBERTSON
No. 34360
UNIVERSITY OF THE STATE OF NEW YORK

DESIGNED

DRAWN

REVIEWED

19-A-1124.2