SKILLING, HELLE, CHRISTIANSEN, ROBERTSON — Structural & Civil Engineers

PROJECT: THE WORLD TRADE CENTER | TITLE: BEAM DETAIL & CONNECTION AT ESCALATOR FL. 110 | DATE: 8-16-73

REVISIONS

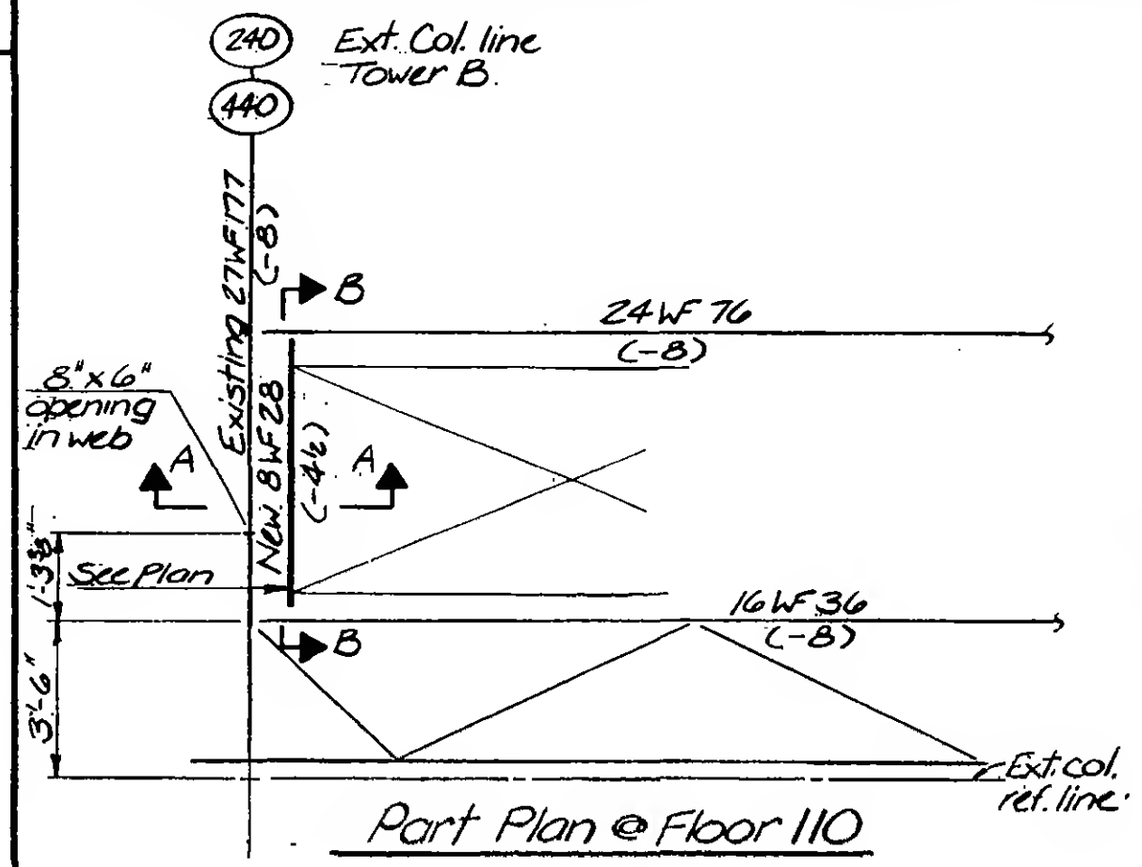

Part Plan @ Floor 110

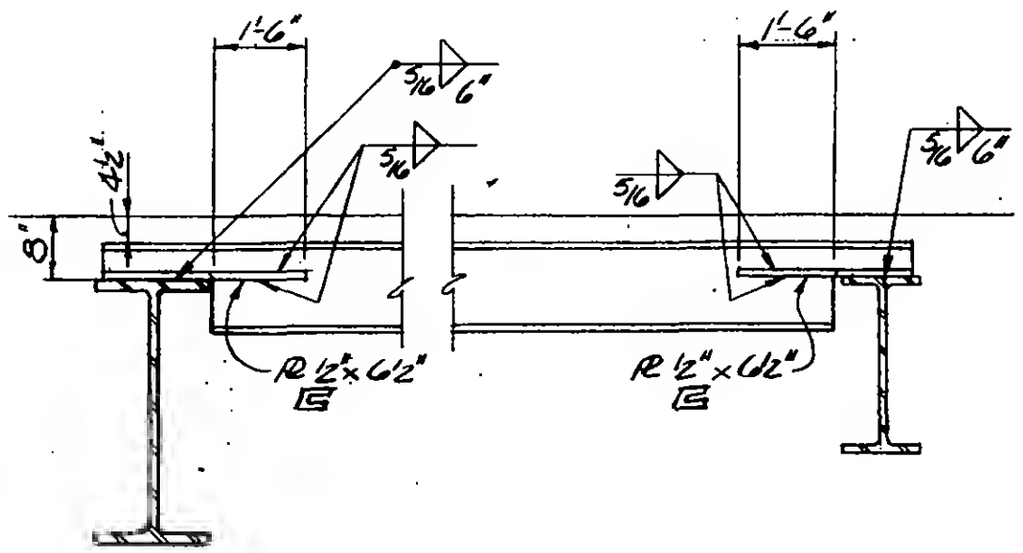

Section B-B

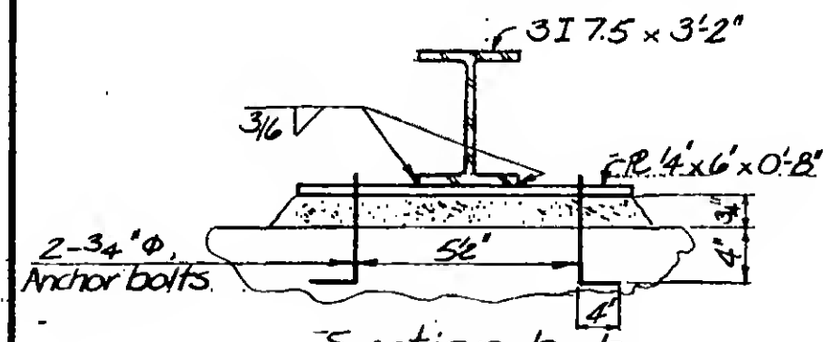

Section b-b

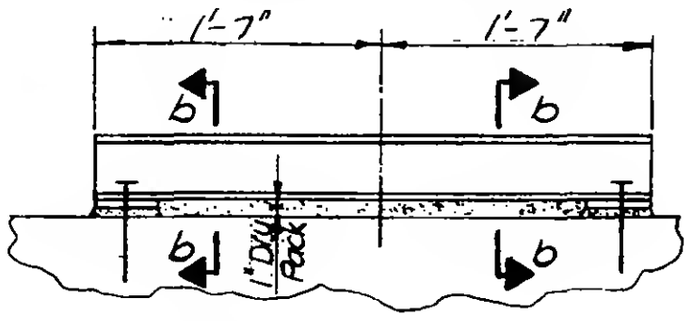

Section a-a

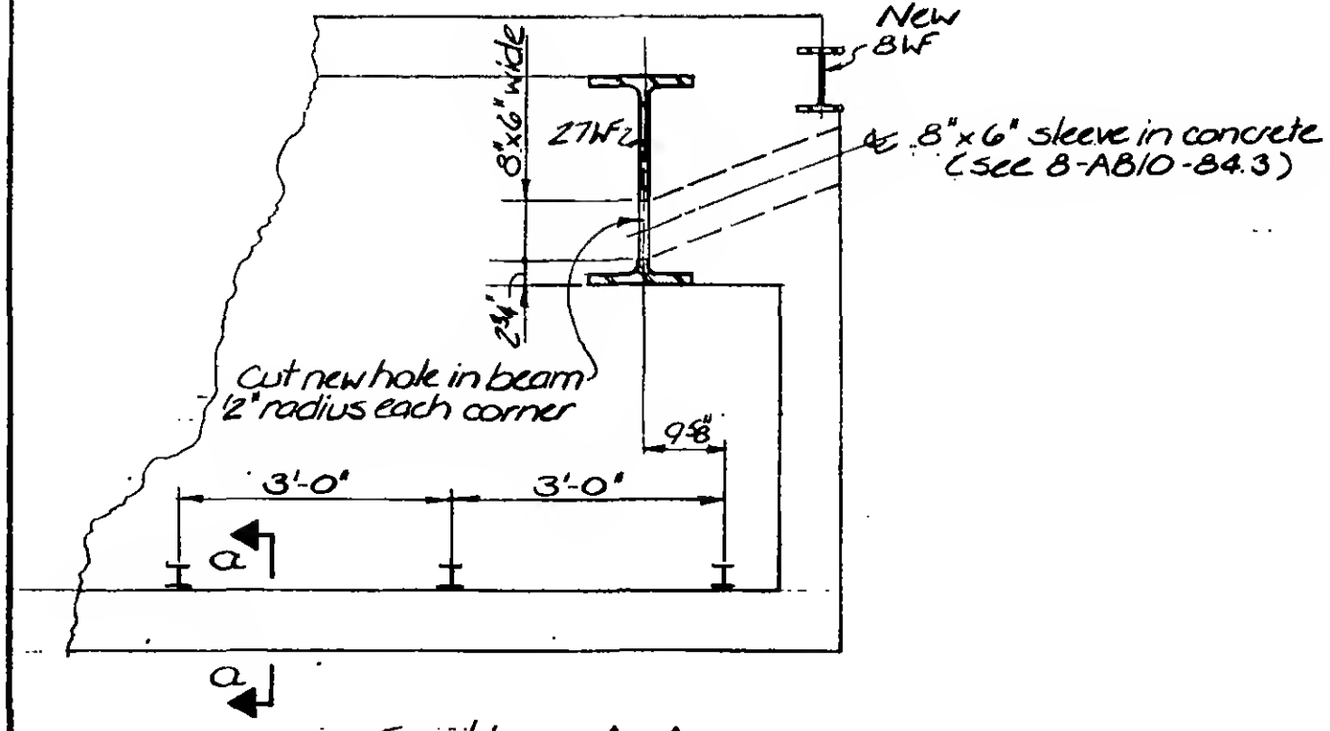

Section A-A

LICENSED PROFESSIONAL ENGINEER — LESLIE E. ROBERTSON — No. 34360 — UNIVERSITY OF THE STATE OF NEW YORK

DESIGNED J. Chiang

DRAWN T. Banks

REVIEWED

19-B-1135