SKILLING, HELLE, CHRISTIANSEN, ROBERTSON — Structural & Civil Engineers

PROJECT THE WORLD TRADE CENTER | TITLE DUMBWAITER MACHINE SUPPORT-FLOOR 108 | DATE 12-28-73

REVISIONS

1 - 3-74

6-26-74

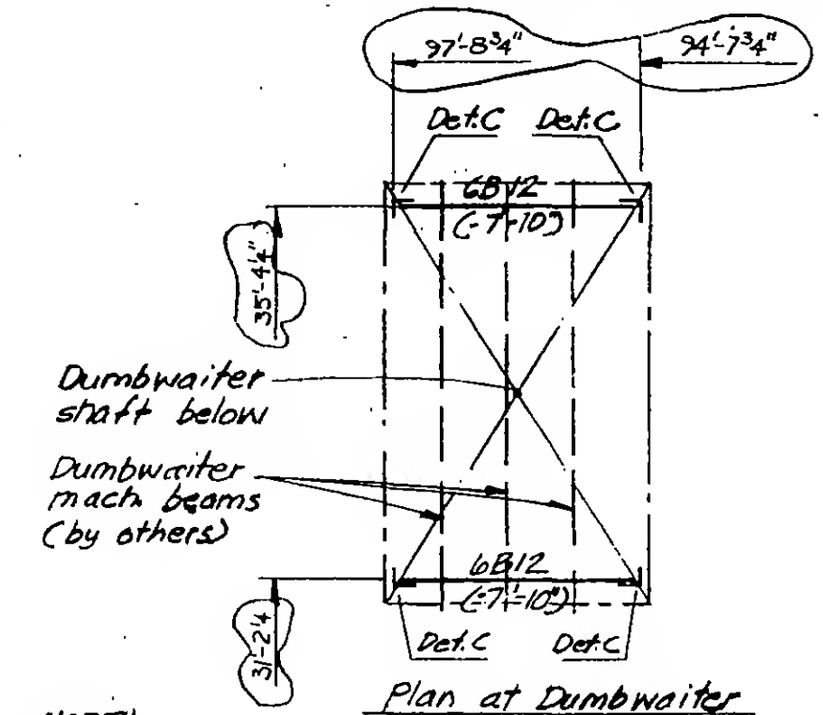

Plan at Dumbwaiter Machine Level



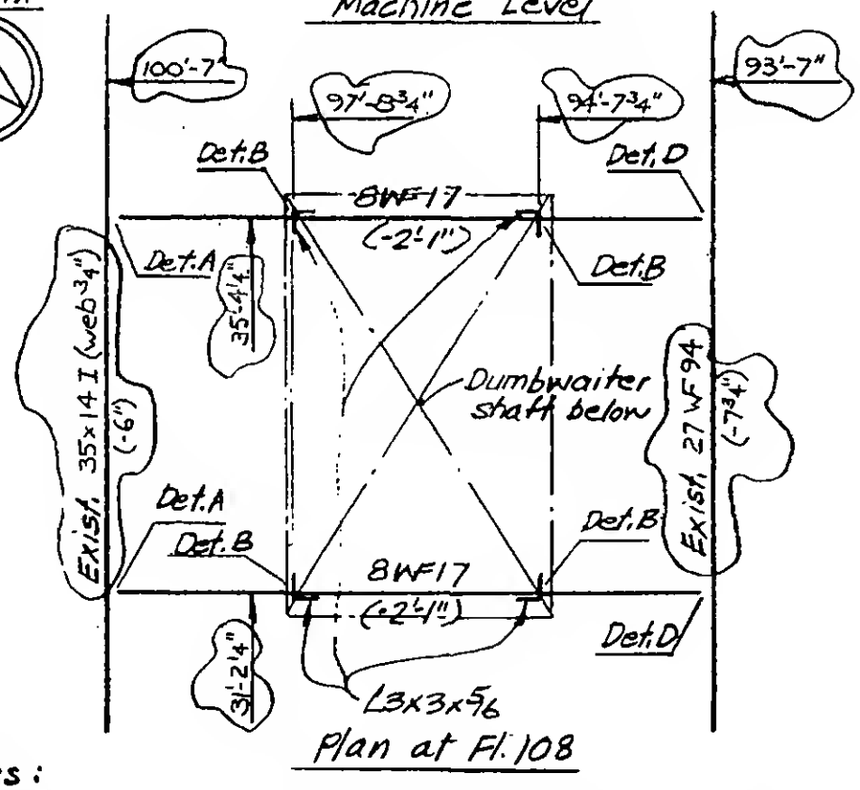

Plan at Fl. 108

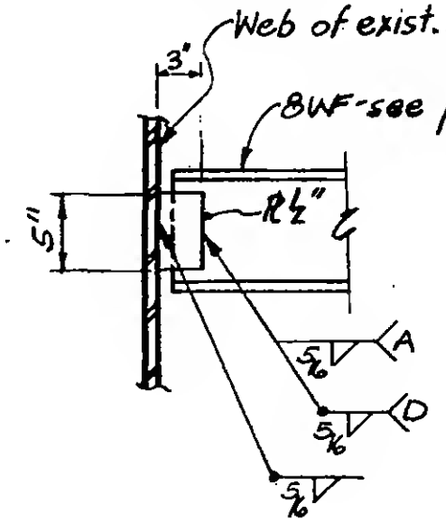

A
D

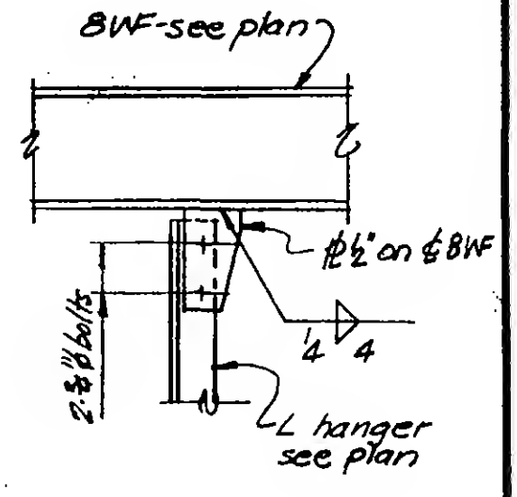

B

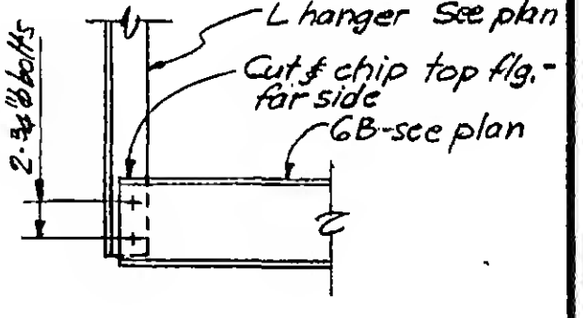

C

Notes:

1. Verify dimensions and location of existing beams in field before fabrication of new work.
2. Top of beam elevations are given thus (-2'-1") from reference Fl. 108, El. 1631'-10", Tower A

LICENSED PROFESSIONAL ENGINEER — LESLIE E ROBERTSON — No. 34360 — UNIVERSITY OF THE STATE OF NEW YORK

DESIGNED JTM

DRAWN

REVIEWED WAB

19-A-1137