SKILLING, HELLE, CHRISTIANSEN, ROBERTSON — Structural & Civil Engineers

PROJECT: THE WORLD TRADE CENTER | TITLE: MODIFICATIONS TO EL 332 FRAMING | DATE: 10-4-71

REVISIONS

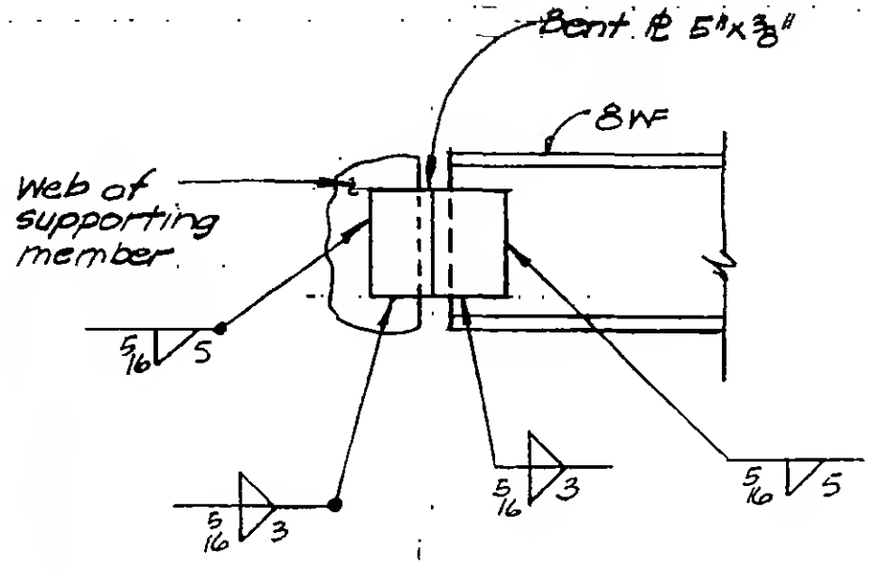

Detail A

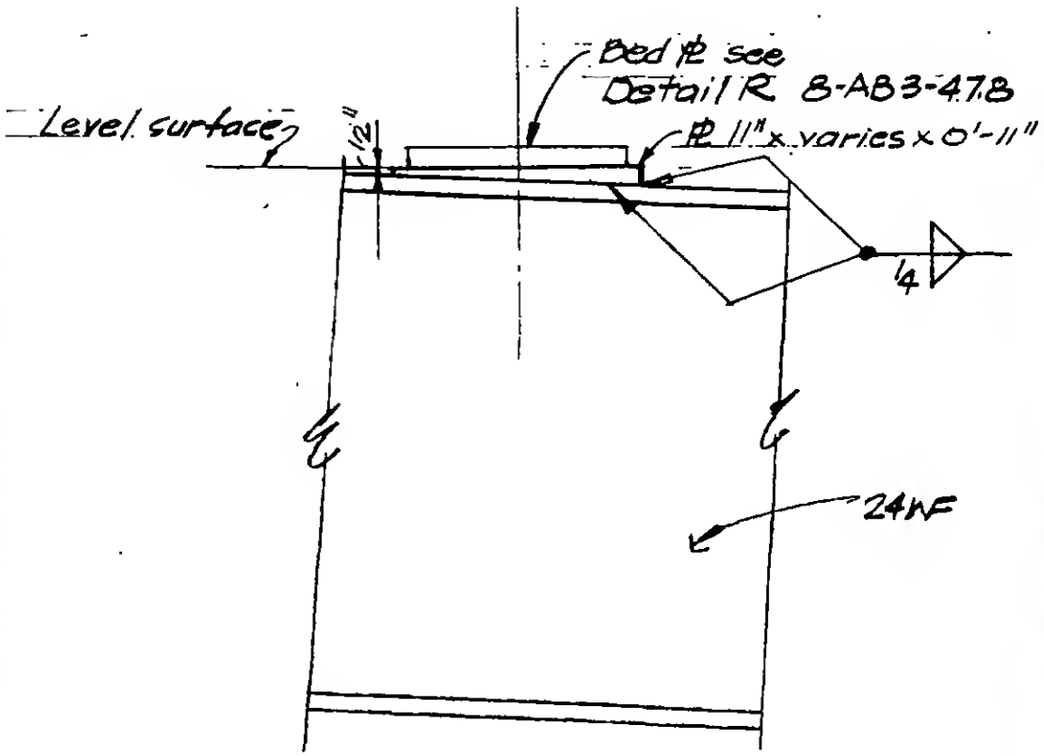

Detail B

LICENSED PROFESSIONAL ENGINEER
LESLIE E. ROBERTSON
No 34960
UNIVERSITY OF THE STATE OF NEW YORK

DESIGNED J. Roet
DRAWN
REVIEWED

19-K-2200